LinMot® Linear-Rotary Motors

Version 2.96e


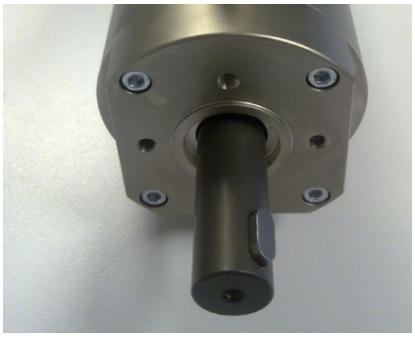

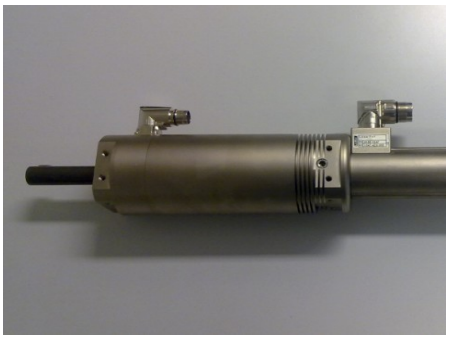



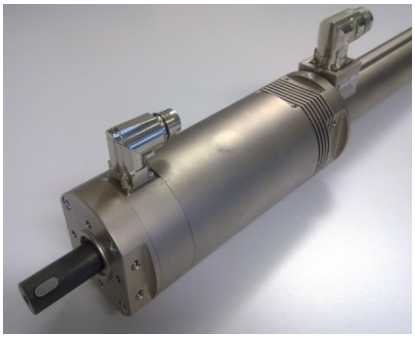



CAUTION

LINMOT SLIDERS CONTAIN NEODYMIUM MAGNETS WHICH MAY DISTURB OR DAMAGE MAGNETIC DATA CARRIERS AND DELICATE ELECTRONIC EQUIPMENT MERELY BY COMING CLOSE TO THEM.

WHEN HANDLING SLIDERS BE AWARE THAT, DUE THE STRONG MAGNETIC ATTRACTION, INJURY FROM FINGERS BEING PINCHED BETWEEN THE SLIDER AND NEARBY STEEL PARTS IS A VERY REAL POSSIBILITY IF CAUTION IS NOT EXERCISED.

THE SLIDERS OF LINMOT® MOTORS CAN REACH TEMPERATURES WHICH MAY CAUSE BURNS UPON BEING TOUCHED.

THE SLIDERS AND SHAFTS OF LINMOT® LINEAR-ROTARY MOTORS ARE FAST-MOVING MACHINE PARTS. THE USER MUST TAKE ALL NECESSARY PRECAUTIONS TO PREVENT THEIR BEING TOUCHED (PROVIDE COVERS, PROTECTION AGAINST TOUCHING ETC.).

DO NOT RUN INTO THE INTERNAL MECHANICAL END STOPS.

Linear-Rotary Motors PR01-52 and PR01-84

Index of Contents

OVERVIEW 7
LinMot PR01 Linear-Rotary Motors 7
PART NAMES 8
Variants model 52 8
Variants model 52 with planetary gear 8
Variants model 84 9
Variants model 84 in 'Stainless Steel' 9
Variants model 84 with planetary gear 9
TECHNICAL DATA MODEL 52 10
TECHNICAL DATA MODEL 52 WITH PLANETARY GEAR 12
TECHNICAL DATA MODEL 84 14
TECHNICAL DATA MODEL 84 WITH PLANETARY GEAR 16
TORQUE-SPEED CURVE ROTARY MOTORS 18
STARTUP 19
Drive settings 19
Configuration Linear Motor 20
Configuration Rotary Motor 20
Homing the Rotary Motor 21
Homing the Linear Motor 21
Example of VAI motion with Rotary Motor 21
Example of motion using a VAI motion command 22
Notes on operating the Linear-Rotary Motor 24
Running in the mechanical end stop may damage the motor 24
Strategy for the linear and rotating movement 24
LINEAR-ROTARY MOTORS WITH PLANETARY GEAR 25
Model 52 with planetary gear 25
Model 84 with planetary gear 25
STAINLESS STEEL VARIANT OF THE PR01-84X80-SSC SERIES 26
Notes on application of the PR01-84x80-SSC series 27
Notes on cleaning the SSC variants 27
Special Application 28
Example: Linear-Rotary motors on a turntable 28
Cam profile for E-stop in applications with rotary disk 29
INSTALLING LINEAR-ROTARY MOTORS 30
DRAWINGS OF LINEAR-ROTARY MOTORS WITH ACCESSORIES 32
CAD-Files 34
ACCESSORIES 35
Heat sinks for linear motors 35
Mounting and cooling flange for linear motors 36
Fan kits 37
Fan kits for Linear Motor 37
Fan kit for Rotary Motors 38

Wipers....39
Multifunction flange and MagSpring....40
Effective force of the MagSpring....40
Dimensions multifunction flanges for mounting of MagSpring Stator....43
Dimensions adapter for mounting of MagSpring-Slider....44
Cam kit MF01-PK84....45
Dimensions Cam flange....46
Dimensions Cam adapter....46
Magnetic spring MagSpring®....47
Load attachment....48
CONNECTOR ASSIGNMENT....49
Connector assignment Linear Motors....49
Connector assignment Rotary Motors....49
DRAWINGS....50
Drawing PR01-52x40-R/37x120F-HP-C-80....50
Stroke range PR01-52x40-R/37x120F-HP-C-80....51
Drawing PR01-52x60-R/37x120F-HP-C-100....52
Stroke range PR01-52x60-R/37x120F-HP-C-100....53
Drawing PR01-52x60-R/37x120F-HP-C-100 with Flange PF02-37x100....54
Drawing PR01-52x60-R/37x120F-HP-C-100 with MagSpring....55
Drawing PR01-52x60-R/37x120F-HP-C-100 Flange/MagSpring/Fan....56
Drawing PR01-52x60-R/37x120F-HP-C-150....57
Stroke range PR01-52x60-R/37x120F-HP-C-150....58
Drawing PR01-52x60-R/37x120F-HP-C-100-G....59
Stroke range PR01-52x60-R/37x120F-HP-C-100-G....60
Drawing PR01-84x80-C/48x240F-C-100....61
Stroke range PR01-84x80-C/48x240F-C-100....62
Drawing PR01-84x80-C/48x240F-C-100 with Flange PF01-48x226....63
Drawing PR01-84x80-C/48x240F-C-100 Multifunction-Flange and MagSpring....64
Drawing PR01-84x80-C/48x240F-C-100 with Flange and MagSpring....65
Drawing PR01-84x80-C/48x360F-C-100....66
Stroke range PR01-84x80-C/48x360F-C-100....67
Drawing PR01-84x80-SSC-C/48x240F-C-150....68
Stroke range PR01-84x80-SSC-C/48x240F-C-150....69
Drawing PR01-84x80-SSC-C/48x360F-C-150....70
Stroke range PR01-84x80-SSC-C/48x360F-C-150....71
Drawing PR01-84x80-C / RS01-84x80-SSC-C / 48x240F-C-300....72
Stroke range PR01-84x80-C / RS01-84x80-SSC-C / 48x240F-C-300....73
Drawing PR01-84x80-C/48x240F-C-150-G....74
Stroke Range PR01-84x80-C/48x240F-C-150-G....75
Drawing PR01-84x80-C/48x360F-C-150-G....76
Stroke Range PR01-84x80-C/48x360F-C-150-G....77
MAINTENANCE OF LINMOT® LINEAR-ROTARY MOTORS....78
Inspection....78
Cleaning and lubrication....78
Disassembling and cleaning....78
Lubrication and assembling....79
Lubricant....79
Cleaning Agent....79
Storage / transport....79
TROUBLE SHOOTING....80

Trouble Shooting of Linear Motors....80
Trouble Shooting of Rotary Motors....81
CAUTION: HANDLING INSTRUCTIONS FOR SLIDERS....82
DECLARATION OF CONFORMITY CE-MARKING....83
CONTACT ADDRESS:....84

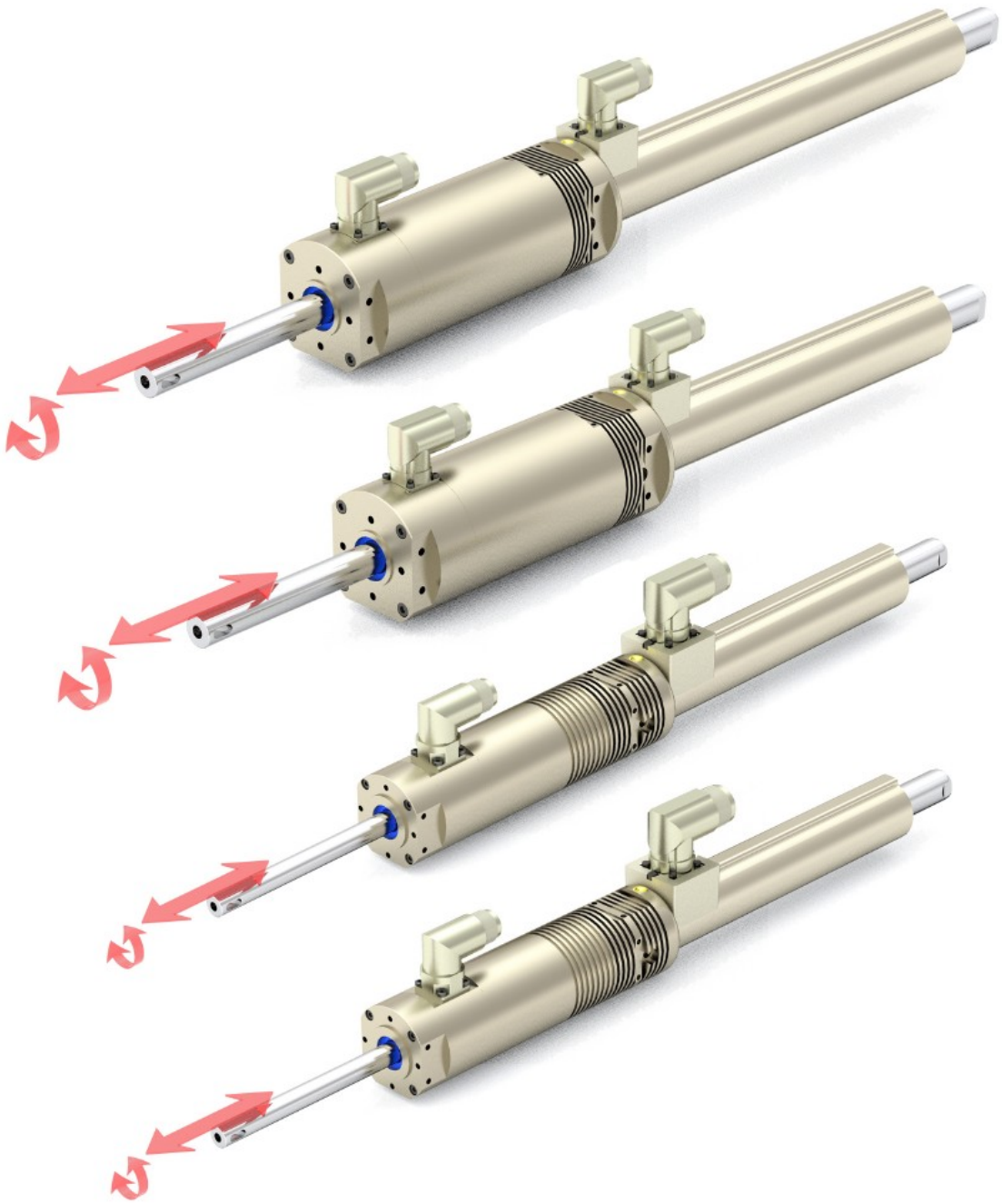

Linear-Rotary Motors series PR01-52 and PR01-84

Overview

LinMot PR01 Linear-Rotary Motors

The LinMot PR01 series of Linear-Rotary motors includes various sizes that differ primarily in the maximum torque available from the rotary motor or the linear force available from the linear motor. In addition to the different sizes, variants with axial through-holes (for a pneumatic line or an ejector, for example) and stainless steel models are available.
A Linear-Rotary motor fundamentally consists of a linear motor with an attached rotary torque motor. The two motors are electrically independent units and can be controlled completely independently of each other.

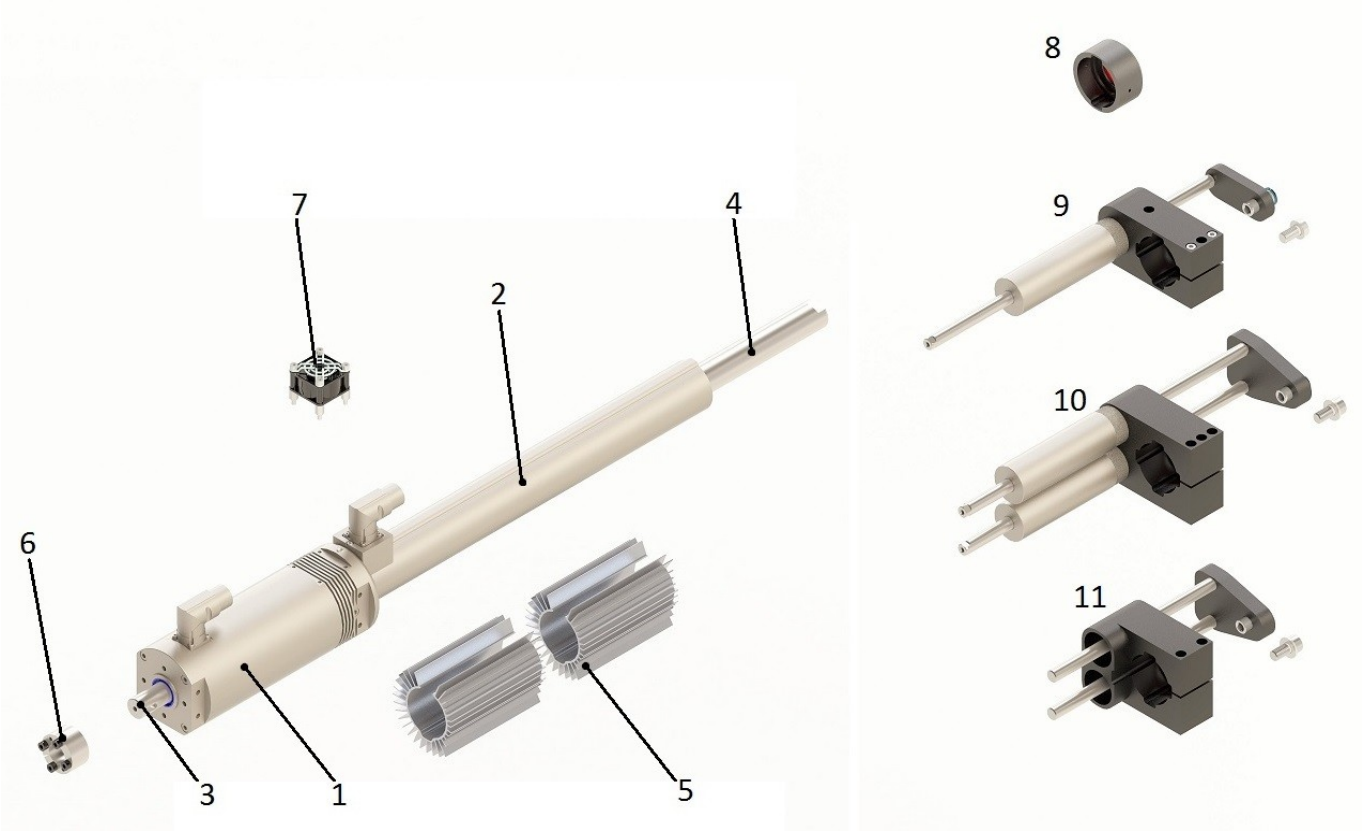

1. Rotary Motor
2. Linear Motor
3. Shaft (moves linear and rotating)
4. Slider of the Linear Motor (moves linear)
5. Option: Heat sinks for Linear Motor
6. Option: Clamp Set for load attachment
7. Option: Fan kit for Rotary Motor
8. Option: Wiper
9. Option: MagSpring kit UNO
10. Option: MagSpring kit DUO
11. Option: Cam kit

Part names

Linear-Rotary motors are supplied fully assembled. The following list gives information about the individual components used.

Variants model 52

PR01-52x40-R/37x120F-HP-C-80	**(solid shaft)**	**Part-No: 0150-1573**
PR01-52x40-R/37x120F-HP-C-80-L	**(hollow shaft)**	**Part-No: 0150-2703**
PR01-52x60-R/37x120F-HP-C-100	**(solid shaft)**	**Part-No: 0150-1197**
PR01-52x60-R/37x120F-HP-C-100-L	**(hollow shaft)**	**Part-No: 0150-2704**
PR01-52x60-R/37x120F-HP-C-150	**(solid shaft)**	**Part-No: 0150-2705**
PR01-52x60-R/37x120F-HP-C-150-L	**(hollow shaft)**	**Part-No: 0150-2706**

Variants model 52 with planetary gear

PR01-52x60-R/37x120F-HP-C-100-G05	**gearbox 5:1**	**Part-No: 0150-2648**
PR01-52x60-R/37x120F-HP-C-100-G10	**gearbox 10:1**	**Part-No: 0150-2647**

Variants model 84

PR01-84x80-C/48x240F-C-100	(solid shaft)	Part-No: 0150-1194
PR01-84x80-C/48x240F-C-100-L	(hollow shaft)	Part-No: 0150-1196
PR01-84x80-C/48x360F-C-100	(solid shaft)	Part-No: 0150-1199
PR01-84x80-C/48x360F-C-100-L	(hollow shaft)	Part-No: 0150-1200
PR01-84x80-C/48x240F-C-300	(solid shaft)	Part-No: 0150-1580
PR01-84x80-C/48x240F-C-300-L	(hollow shaft)	Part-No: 0150-2554

Variants model 84 in 'Stainless Steel'

PR01-84x80-SSC-C/48x240F-C-150	(solid shaft, Stainless Steel)	Part-No: 0150-1581
PR01-84x80-SSC-C/48x240F-C-150-L	(hollow shaft , Stainless Steel)	Part-No: 0150-1582
PR01-84x80-SSC-C/48x360F-C-150	(solid shaft, Stainless Steel)	Part-No: 0150-1579
PR01-84x80-SSC-C/48x360F-C-150-L	(hollow shaft Stainless Steel)	Part-No: 0150-1583
PR01-84x80-SSC-C/48x240F-C-300-L	(hollow shaft Stainless Steel)	Part-No: 0150-2555

Variants model 84 with planetary gear

PR01-84x80-C-G/48x240F-C-150-G05	gearbox 5:1	Part-No: 0150-2531
PR01-84x80-C-G/48x240F-C-150-G07	gearbox 7:1	Part-No: 0150-2532
PR01-84x80-C-G/48x240F-C-150-G10	gearbox 10:1	Part-No: 0150-2533
PR01-84x80-C-G/48x360F-C-150-G05	gearbox 5:1	Part-No: 0150-2535
PR01-84x80-C-G/48x360F-C-150-G07	gearbox 7:1	Part-No: 0150-2536
PR01-84x80-C-G/48x360F-C-150-G10	gearbox 10:1	Part-No: 0150-2537

Technical data model 52

	Unit	PR01-52x40-R/ 37x120F-HP-C-80 (-L)	PR01-52x60-R/ 37x120F-HP-C-100 (-L)	PR01-52x60-R/ 37x120F-HP-C-150 (-L)			
Linear Motor*							
Max Stroke	mm	80	100	150			
Short stroke range	mm	80	100	150			
Peak Force ****	N	255 (-L 229)	255 (-L 229)	255 (-L 229)			
Cont. Force with Fan ****	N	92 (-L 82)	92 (-L 82)	92 (-L 82)			
Cont Force ****	N	51 (-L 45)	51 (-L 45)	51 (-L 45)			
Max Velocity	m/s	3.9	3.9	3.9			
Max Current	A	15	15	15			
Force Constant	N/A	17	17	17			
Repeatability	mm	+/- 0.05	+/- 0.05	+/- 0.05			
Phase Resistance (20°C)	Ohm	2.35	2.35	2.35			
Phase Induction	mH	1.6	1.6	1.6			
Linearity	%	+/- 0.1	+/- 0.1	+/- 0.1			
Rotary Motor*							
Peak Torque (stall) ($M_{0\ Max}$)	Nm	1.53	2.2	2.2			
Continuous Torque (stall)	Nm	0.32	0.47	0.47			
Continuous Torque (stall) with Fan	Nm	0.47	0.68	0.68			
Recommended max revolution (n_{Max})	rpm	1500	1500	1500			
Max Current**	A_{rms}	5.66	9.55	9.55			
Torque constant	Nm/A_{rms}	0.27	0.23	0.23			

	Unit	PR01-52x40-R/ 37x120F-HP-C-80 (-L)	PR01-52x60-R/ 37x120F-HP-C-100 (-L)	PR01-52x60-R/ 37x120F-HP-C-150 (-L)			
Concentricity (max stroke without payload)	mm	<+/-0.05	<+/-0.05	<+/-0.07			
Phase Resistance (20°C)	Ohm	7.1	3	3			
Induction	mH	4.8	2.8	2.8			
Repeatability	°	+/- 0.05° (+/-3')	+/- 0.05° (*/-3')	+/- 0.05° (*/-3')			
Mechanical Dimensions* **							
Length	mm	503	565	704			
Diameter Linear Motor	mm	37	37	37			
Diameter Rotary Motor	mm	52	52	52			
Fitting Flange (front)	mm	30	30	30			
Mass Total	kg	2.68	3.12	*3.7*			
Moving mass (linear)	kg	0.79	0.86	0.95			
Moment of inertia (rotation)	kgcm2	0.22	0.26	*0.31*			
Diameter shaft	mm	12h9	12h9	12h9			
Option hollow shaft		ja	ja	ja			
Diameter hole (-L version)		2.5 mm /max 6bar Connection: (front) M5/ back 1/8”	2.5 mm/max 6bar Connection: (front) M5 / back 1/8”	2.5 mm /max 6bar Connection: (front) M5/ back 1/8”			
Protection Class		IP54	IP54	IP54			

Specification of products are subject to change without notification

* with Drive E1200-UC series
** Attention: LinMot Talk shows peak current -->(I_{rms}:= I_{peak}/1.4)
***details see drawings
**** hollow shaft versions -L: 10% reduced force (data in bracket)

Technical data model 52 with planetary gear

	Unit	PR01-52x60-R/ 37x120F-HP-C-100-G05	PR01-52x60-R/ 37x120F-HP-C-100-G10				
Linear Motor*							
Max Stroke	mm	100	100				
Short stroke range	mm	100	100				
Peak Force ****	N	255	255				
Cont. Force with Fan ****	N	92	92				
Cont Force ****	N	51	51				
Max Velocity	m/s	3.9	3.9				
Max Current	A	15	15				
Force Constant	N/A	17	17				
Repeatability	mm	+/- 0.05	+/- 0.05				
Phase Resistance (20°C)	Ohm	2.35	2.35				
Phase Induction	mH	1.6	1.6				
Linearity	%	+/- 0.1	+/- 0.1				
Rotary Motor*							
Peak Torque (stall) ($M_{0\ Max}$)	Nm	2.2	2.2				
Continuous Torque (stall)	Nm	0.47	0.47				
Continuous Torque (stall) with Fan	Nm	0.68	0.68				
Recommended max revolution (n_{Max})	U/min	1500	1500				
Max Current**	A_{rms}	9.55	9.55				
Torque constant	Nm/A_{rms}	0.23	0.23				

	Einheit	PR01-52x60-R/ 37x120F-HP-C-100-G05	PR01-52x60-R/ 37x120F-HP-C-100-G10				
Gear ratio	i	5	10				
max revolution	U/min	300	150				
Peak Torque (gearbox output)	Nm	10 Nm	20 Nm				
Continuous Torque (gearbox output)	Nm	2 Nm	4 Nm				
Phase Resistance (20°C)	Ohm	3	3				
Induction	mH	2.8	2.8				
Repeatability	°	+/- 0.05° (*/-3')	+/- 0.05° (*/-3')				
Backlash of planetary gear	arcmin	<10	<10				
Mechanical Dimensions* **							
Length	mm	620	620				
Diameter Linear Motor	mm	37	37				
Diameter Rotary Motor	mm	52	52				
Mass Total	kg	5.15	5.15				
Moving mass (linear)	kg	2.4	2.4				
Moment of inertia (rotation)	kgcm2	2	2				
Option hollow shaft		--	--				
Protection Class		IP54	IP54				

Technical data model 84

	Unit	PR01-84x80-C/ 48x240F-C-100 (-L)	PR01-84x80-C/ 48x360F-C-100 (-L)	PR01-84x80-SSC-C/ 48x240F-C-150 (-L)	PR01-84x80-SSC-C/ 48x360F-C-150 (-L)	PR01-84x80-C/ 48x240F-C-300(-L)	PR01-84x80-SSC-C/ 48x240F-C-300 (-L)
Linear Motor*							
Max Stroke	mm	130	130	150	150	300	300
Short stroke range	mm	100	100	100	100	200	200
Peak Force****	N	572 (-L 514)	1024 (-L 921)	572 (-L 514)	1024 (-L 921)	572 (-L 514)	514
Cont. Force with Fan****	N	255 (-L 230)	354 (-L 319)	255 (-L 230)	354 (-L 319)	255	255
Cont Force****	N	145 (-L 130)	203 (-L 182)	145 (-L 130)	203 (-L 182)	145	145
Max Velocity	m/s	3	2.1	3	2.1	3	3
Max Current	A	26	32	26	32	26	26
Force Constant	N/A	22	32	22	32	22	22
Repeatability	mm	+/- 0.05	+/- 0.05	+/- 0.05	+/- 0.05	+/- 0.05	+/- 0.05
Phase Resistance (20°C)	Ohm	1.0	1.38	1.0	1.38	1.0	1.0
Phase Induction	mH	1.0	1.6	1.0	1.6	1.0	1.0
Linearity	%	+/- 0.15	+/- 0.15	+/- 0.15	+/- 0.15	+/- 0.15	+/- 0.15
Rotary Motor*							
Peak Torque (stall) ($M_{0\ Max}$)	Nm	8.9	8.9	8.9	8.9	8.9	8.9
Continuous Torque (stall)	Nm	1.9	1.9	1.9	1.9	1.9	1.9
Continuous Torque (stall) mit Fan	Nm	2.64	2.64	2.64	2.64	2.64	2.64
Recommended max revolution (n_{Max})	rpm	1000	1000	1000	1000	1000	1000
Max Current**	A_{rms}	17.68	17.68	17.68	17.68	17.68	17.68
Torque constant	Nm/A_{rms}	0.5035	0.5035	0.5035	0.5035	0.5035	0.5035

	Unit	PR01-84x80-C/ 48x240F- C-100 (-L)	PR01-84x80-C/ 48x360F- C-100 (-L)	PR01-84x80- SSC-C/ 48x240F- C-150 (-L)	PR01-84x80- SSC-C/ 48x360F- C-150 (-L)	PR01-84x80-C/ 48x240F-C-300 (-L)	PR01-84x80- SSC-C/ 48x240F-C-300 (-L)
Concentricity (max stroke without payload)	mm	<+/-0.05	<+/-0.05	<+/-0.07	<+/-0.07	<+/-0.3	<+/-0.3
Phase Resistance (20°C)	Ohm	1.1	1.1	1.1	1.1	1.1	1.1
Induction	mH	4.3	4.3	4.3	4.3	4.3	4.3
Repeatability	°	+/- 0.05° (*/-3')	+/- 0.05° (*/-3')	+/- 0.05° (*/-3')	+/- 0.05° (*/-3')	+/- 0.05° (*/-3')	+/- 0.05° (*/-3')
Mechanical Dimensions* **							
Length	mm	726	846	819	959	1222	1222
Diameter Linear Motor	mm	48	48	48	48	48	48
Diameter Rotary Motor	mm	84	84	84	84	84	84
Fitting Flange (front)	mm	35	35	48	48	48	48
Mass Total	kg	8.85	10.48	11	12.4	12.5	12.5
Moving mass (linear)	kg	2.5	2.9	2.6	3.2	3.6	3.6
Moment of inertia (rotation)	kgcm2	2.0	2.0	2.3	2.3	2.4	2.4
Diameter shaft	mm	20h9	20h9	20h9	20h9	20h9	20h9
Option hollow shaft in shaft		yes	yes	yes	yes	no	yes
Diameter hole (-L version)		4 mm / max 6 bar Back (slider) G1/4 Front (rod) : G1/8	4 mm / max 6 bar Back (slider) G1/4 Front (rod) : G1/8	4 mm / max 6 bar Back (slider) G1/4 Front (rod) : G1/8	4 mm / max 6 bar Back (slider) G1/4 Front (rod) : G1/8	4 mm / max 6 bar Back (slider) G1/4 Front (rod) : G1/8	4 mm / max 6 bar Back (slider) G1/4 Front (rod) : G1/8
Protection Class		IP54	IP54	IP54 / IP65	IP54 / IP65	IP54	IP54 / IP65

Specification of products are subject to change without notification * with Drive E1200-UC series

** Attention: LinMot Talk shows peak current -->(I_{rms}:= I_{peak}/1.4)
*** details see drawings
**** hollow shaft versions -L: 10% reduced force (data in bracket)

Technical data model 84 with planetary gear

	Unit	PR01-84x80-C/ 48x240F- C-150-G05	PR01-84x80-C/ 48x240F- C-150-G07	PR01-84x80-C/ 48x240F- C-150-G10	PR01-84x80-C/ 48x360F- C-150-G05	PR01-84x80-C/ 48x360F- C-150-G07	PR01-84x80-C/ 48x360F- C-150-G10
Linear Motor*							
Max Stroke	mm	150	150	150	150	150	150
Short stroke range	mm	100	100	100	100	100	100
Peak Force****	N	572	572	572	1024	1024	1024
Cont. Force with Fan****	N	255	255	255	354	354	354
Cont Force****	N	145	145	145	203	203	203
Max Velocity	m/s	3	3	3	2.1	2.1	2.1
Max Current	A	26	26	26	32	32	32
Force Constant	N/A	22	22	22	32	32	32
Repeatability	mm	+/- 0.05	+/- 0.05	+/- 0.05	+/- 0.05	+/- 0.05	+/- 0.05
Phase Resistance (20°C)	Ohm	1.0	1.0	1.0	1.38	1.38	1.38
Phase Induction	mH	1.0	1.0	1.0	1.6	1.6	1.6
Linearity	%	+/- 0.15	+/- 0.15	+/- 0.15	+/- 0.15	+/- 0.15	+/- 0.15
Rotary Motor*							
Peak Torque (stall) ($M_{0\ Max}$)	Nm	8.9	8.9	8.9	8.9	8.9	8.9
Continuous Torque (stall)	Nm	1.9	1.9	1.9	1.9	1.9	1.9
Continuous Torque (stall) with Fan	Nm	2.64	2.64	2.64	2.64	2.64	2.64
Recommended max revolution (n_{Max})	U/min	1000	1000	1000	1000	1000	1000
Max Current**	A_{rms}	17.68	17.68	17.68	17.68	17.68	17.68
Torque constant	Nm/A_{rms}	0.5035	0.5035	0.5035	0.5035	0.5035	0.5035

	Unit	PR01-84x80-C/ 48x240F-C-150-G05	PR01-84x80-C/ 48x240F-C-150-G07	PR01-84x80-C/ 48x240F-C-150-G10	PR01-84x80-C/ 48x360F-C-150-G05	PR01-84x80-C/ 48x360F-C-150-G07	PR01-84x80-C/ 48x360F-C-150-G10
Gear ratio	i	5	7	10	5	7	10
max revolution	U/min	200	142	100	200	142	100
Peak Torque (gearbox output)	Nm	40	56	40	40	56	75
Continuous Torque (gearbox output)	Nm	8.5	12	17	8.5	12	17
Phase Resistance (20°C)	Ohm	1.1	1.1	1.1	1.1	1.1	1.1
Induction	mH	4.3	4.3	4.3	4.3	4.3	4.3
Repeatability	°	+/- 0.05° (*/-3')	+/- 0.05° (*/-3')	+/- 0.05° (*/-3')	+/- 0.05° (*/-3')	+/- 0.05° (*/-3')	+/- 0.05° (*/-3')
Backlash of planetary gear	arcmin	<10	<10	<10	<10	<10	<10
Mechanical Dimensions* **							
Length	mm	862	862	862	982	982	982
Diameter Linear Motor	mm	48	48	48	48	48	48
Diameter Rotary Motor	mm	84	84	84	84	84	84
Mass Total	kg	13.0	13.0	13.0	14.6	14.6	14.6
Moving mass (linear)	kg	6.73	6.73	6.73	7.33	7.33	7.33
Moment of inertia (rotation)	kgcm2	2.3	2.3	2.3	2.3	2.3	2.3
Option hollow shaft in shaft		--	--	--	--	--	--
Protection Class		IP54	IP54	IP54	IP54	IP54	IP54

Specification of products are subject to change without notification * with Drive E1200-UC series

** Attention: LinMot Talk shows peak current -->(I_{rms}:= I_{peak}/1.4)
*** details see drawings
**** hollow shaft versions -L: 10% reduced force (data in bracket)

NOTE: Gear box motors may regenerate a lot of energy into the DC-Link → use drives with brake resistor or use additional DC-Link capacitor (10'000 uF)

Torque-Speed Curve Rotary Motors

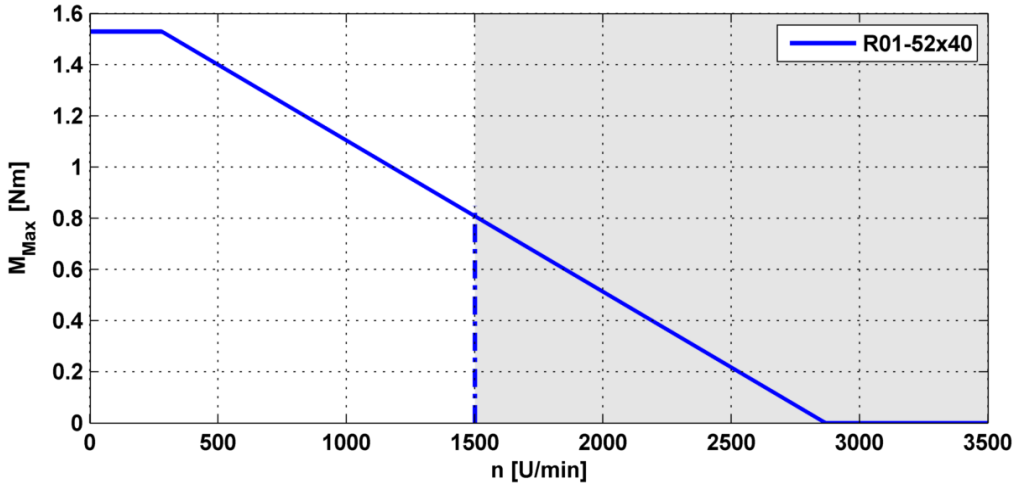

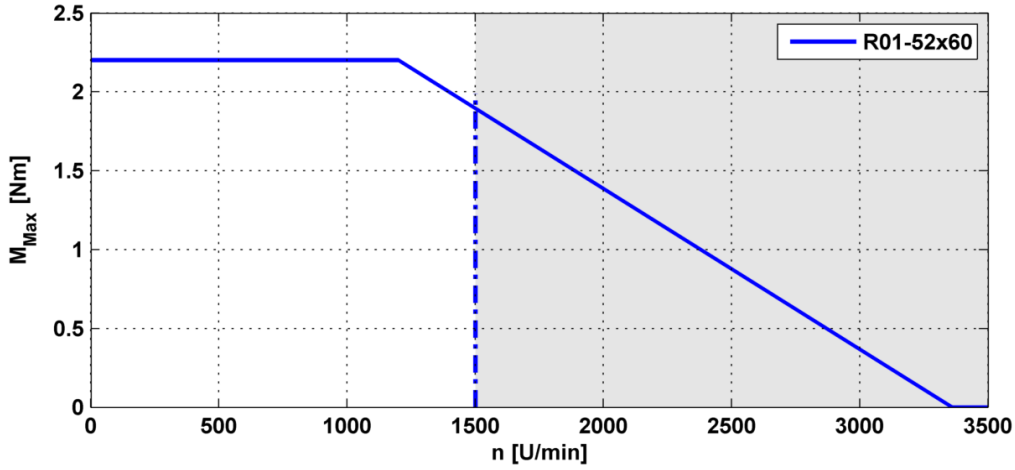

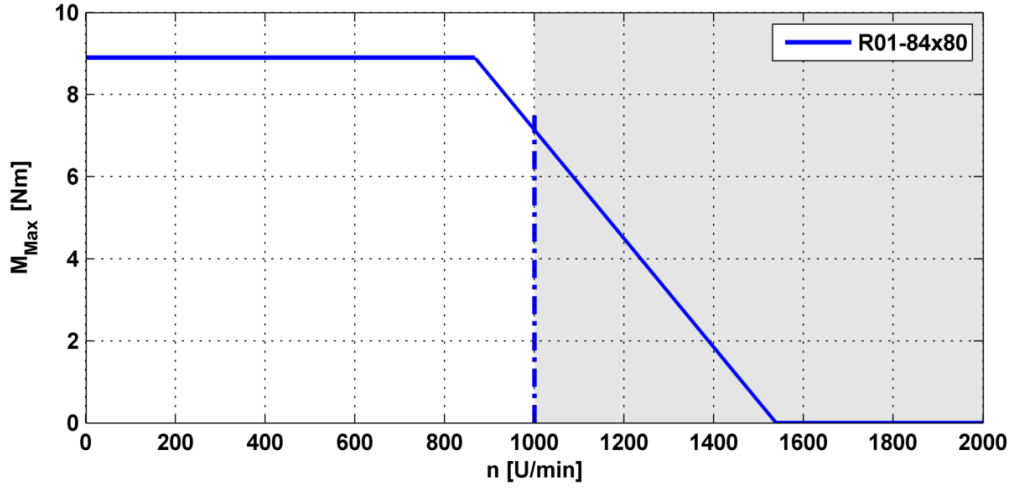

Startup

The linear motor and rotary motor are electrically independent units. This means that the Linear-Rotary motor can be started up sequentially. It makes no difference which motor (linear or rotary) is started up first.

Drive settings

The various parameters for the linear motor and the rotary motor are set using the corresponding wizard in the LinMot Talk configuration program. (Contact LinMot Support if you do not see the folder "Motors\LinMot Linear Rotary Motor".)

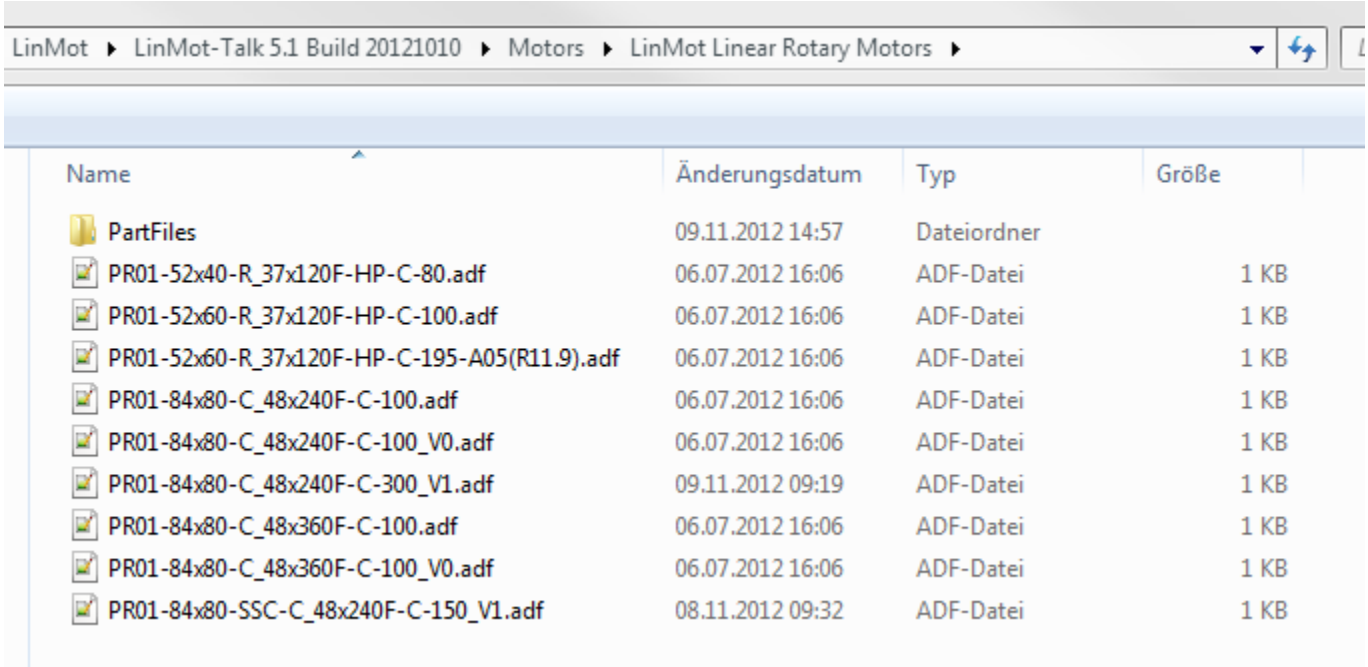

Name	Änderungsdatum	Typ	Größe
PartFiles	09.11.2012 14:57	Dateiordner	
PR01-52x40-R_37x120F-HP-C-80.adf	06.07.2012 16:06	ADF-Datei	1 KB
PR01-52x60-R_37x120F-HP-C-100.adf	06.07.2012 16:06	ADF-Datei	1 KB
PR01-52x60-R_37x120F-HP-C-195-A05(R11.9).adf	06.07.2012 16:06	ADF-Datei	1 KB
PR01-84x80-C_48x240F-C-100.adf	06.07.2012 16:06	ADF-Datei	1 KB
PR01-84x80-C_48x240F-C-100_V0.adf	06.07.2012 16:06	ADF-Datei	1 KB
PR01-84x80-C_48x240F-C-300_V1.adf	09.11.2012 09:19	ADF-Datei	1 KB
PR01-84x80-C_48x360F-C-100.adf	06.07.2012 16:06	ADF-Datei	1 KB
PR01-84x80-C_48x360F-C-100_V0.adf	06.07.2012 16:06	ADF-Datei	1 KB
PR01-84x80-SSC-C_48x240F-C-150_V1.adf	08.11.2012 09:32	ADF-Datei	1 KB

The Linear-Rotary motors are located in the folder "Motors\LinMot Linear Rotary Motors". It makes no difference whether the linear or rotary motor is configured first.

Configuration Linear Motor

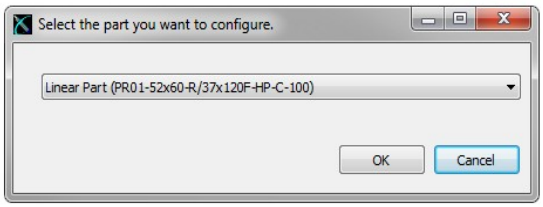

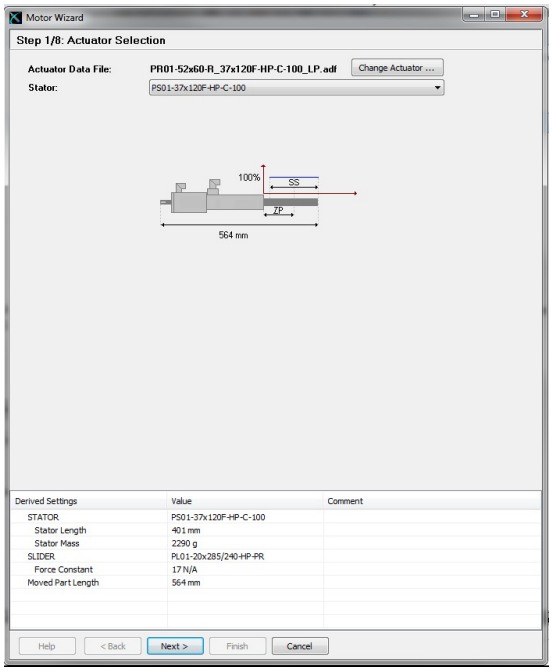

Configuration Rotary Motor

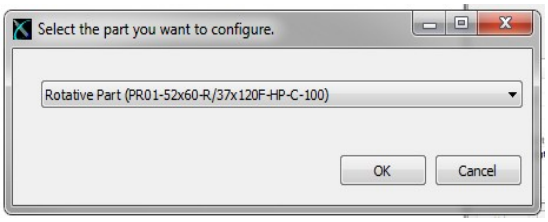

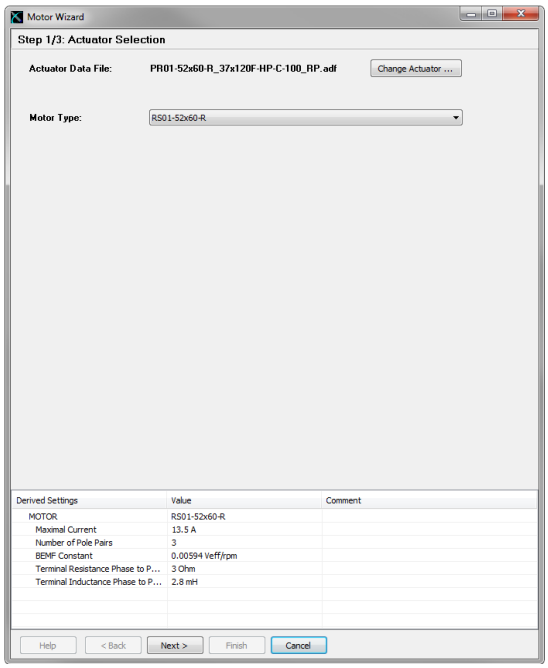

Homing the Rotary Motor

No homing is necessary, because the rotary motor uses an absolute measurement system (single turn).

Homing the Linear Motor

If the linear motor is homed to the internal stop of the Linear-Rotary motor, then the maximum homing velocity must be no greater than 0.01 m/s.

Example of VAI motion with Rotary Motor

The LinMot Talk program uses units on the parameter page the same way they are used to actuate linear motors. In order to control a rotary motor, therefore, a ratio between one motor revolution (360°) and the linear travel distance must be defined **(by default, 1 revolution through 360° corresponds to a linear travel distance of 36 mm).**

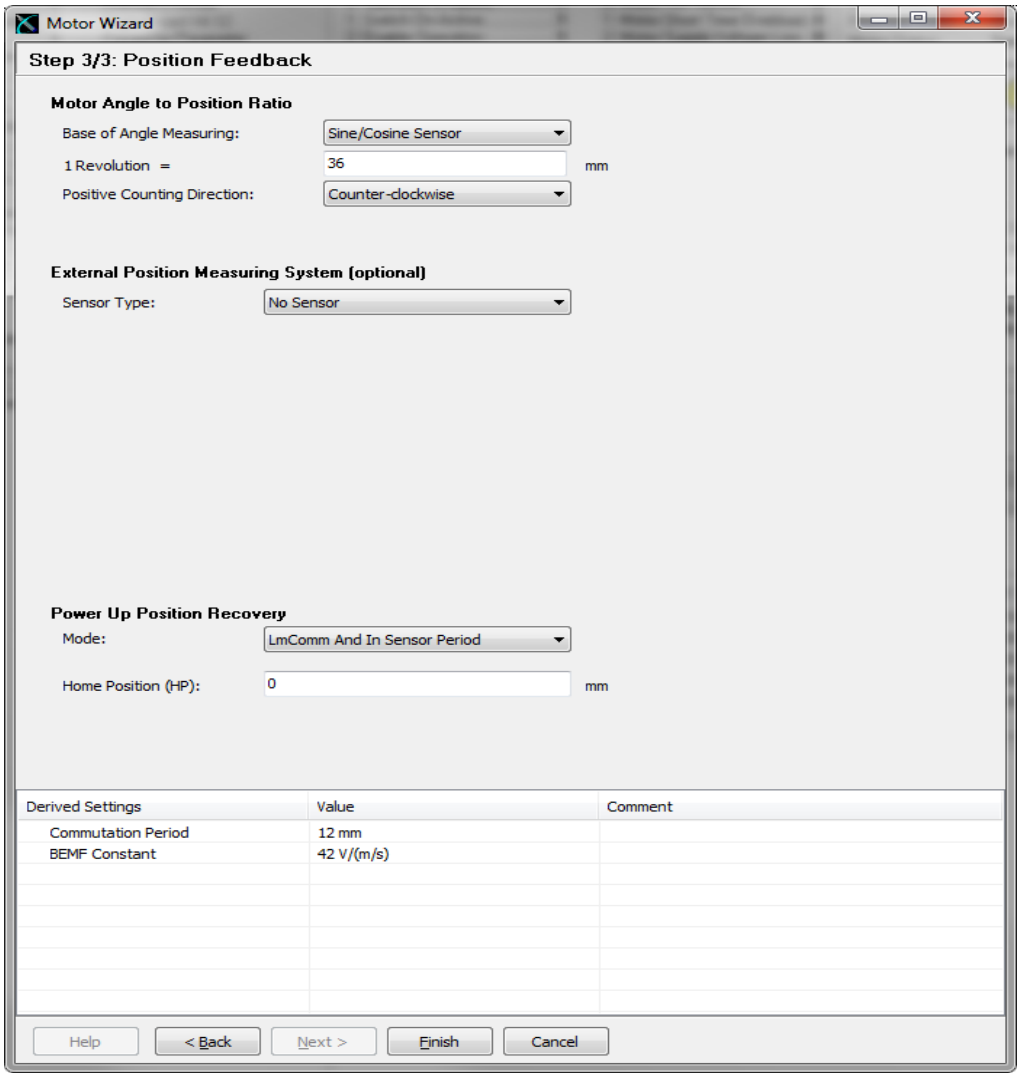

Motor Wizard: Motor Angle to Position Ratio

The ratio can be freely defined. Keep in mind that the "position" parameter type is defined as a 32-bit value and the maximum position resolution is 0.1 µm. This means that the maximum stroke is limited to between -214748 mm and 214748 mm.

Position [mm]	-214748 to 214748
1 revolution = 36 mm (1° == 0.1 mm)	Maximum number of revolutions = 11930
1 revolution = 360 mm (1° == 1 mm)	Maximum number of revolutions = 1193

The ratio, however, affects not only the positions but also the PID controller. The table below shows an example of this:

P [A/mm]	5
1 revolution = 36 mm (1° == 0.1 mm)	For a deviation of 1°, the drive reacts with 0.5 A
1 revolution = 360 mm (1° == 1 mm)	For a deviation of 1°, the drive reacts with 5 A

This means that if the "Motor Angle to Position Ratio" is changed, the controller parameters must be (manually) adjusted as well.

Example of motion using a VAI motion command

A VAI Motion Command (motion using the Velocity Acceleration Interpolator) can be started directly via the LinMot Talk program.

1) Definition of the movement:

Number of revolutions	25
Acceleration phase	100 [ms]
Maximal velocity	1500 [rpm]
Delay	50 [ms]
1 Revolution	36 [mm]

2) Converting the rotary parameters into the linear system:

$$Target\ Position[mm] = Number\ of\ revolutions * 36[mm] = 900[mm]$$

$$Maximal\ Velocity[m/s] = (1500[1/min] * 0.036[m])/60 = 0.9[m/s]$$

$$Acceleration[m/s^2] = Maximal\ Velocity[m/s]/0.1[s] = 9[m/s^2]$$

$$Deceleration[m/s^2] = Maximal\ Velocity[m/s]/0.05[s] = 18[m/s^2]$$

3) Entering the parameters in LinMot-Talk → Control Panel → Motion Cmd Interface

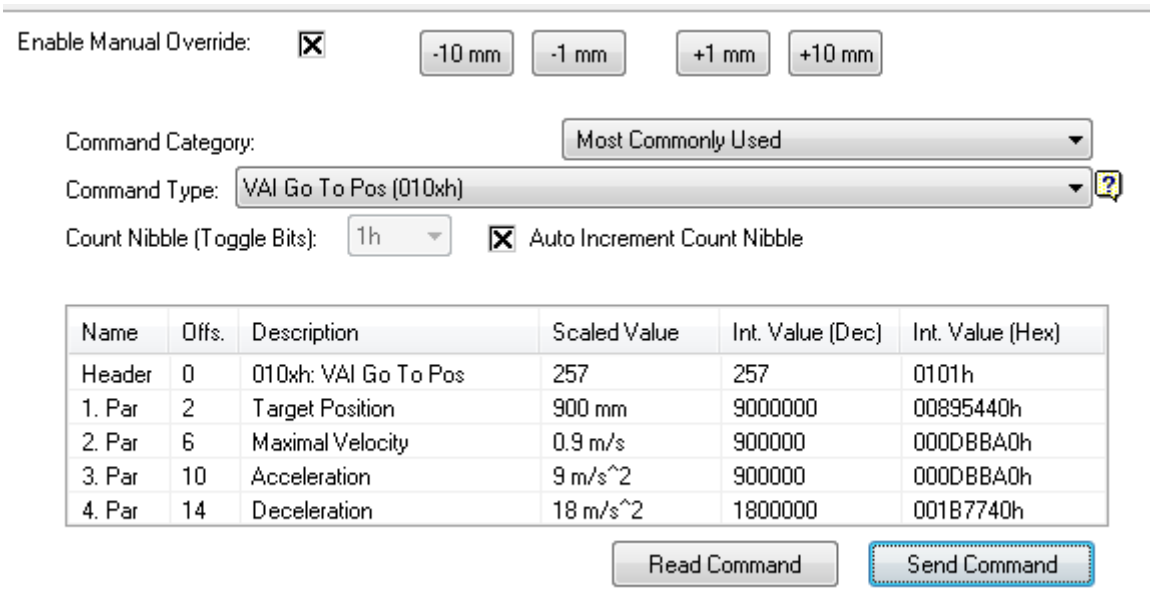

Name	Offs.	Description	Scaled Value	Int. Value (Dec)	Int. Value (Hex)
Header	0	010xh: VAI Go To Pos	257	257	0101h
1. Par	2	Target Position	900 mm	9000000	00895440h
2. Par	6	Maximal Velocity	0.9 m/s	900000	000DBBA0h
3. Par	10	Acceleration	9 m/s^2	900000	000DBBA0h
4. Par	14	Deceleration	18 m/s^2	1800000	001B7740h

Using the oscilloscope (integrated in LinMot-Talk), the motion can be recorded and the PID control parameters can be adjusted as needed.

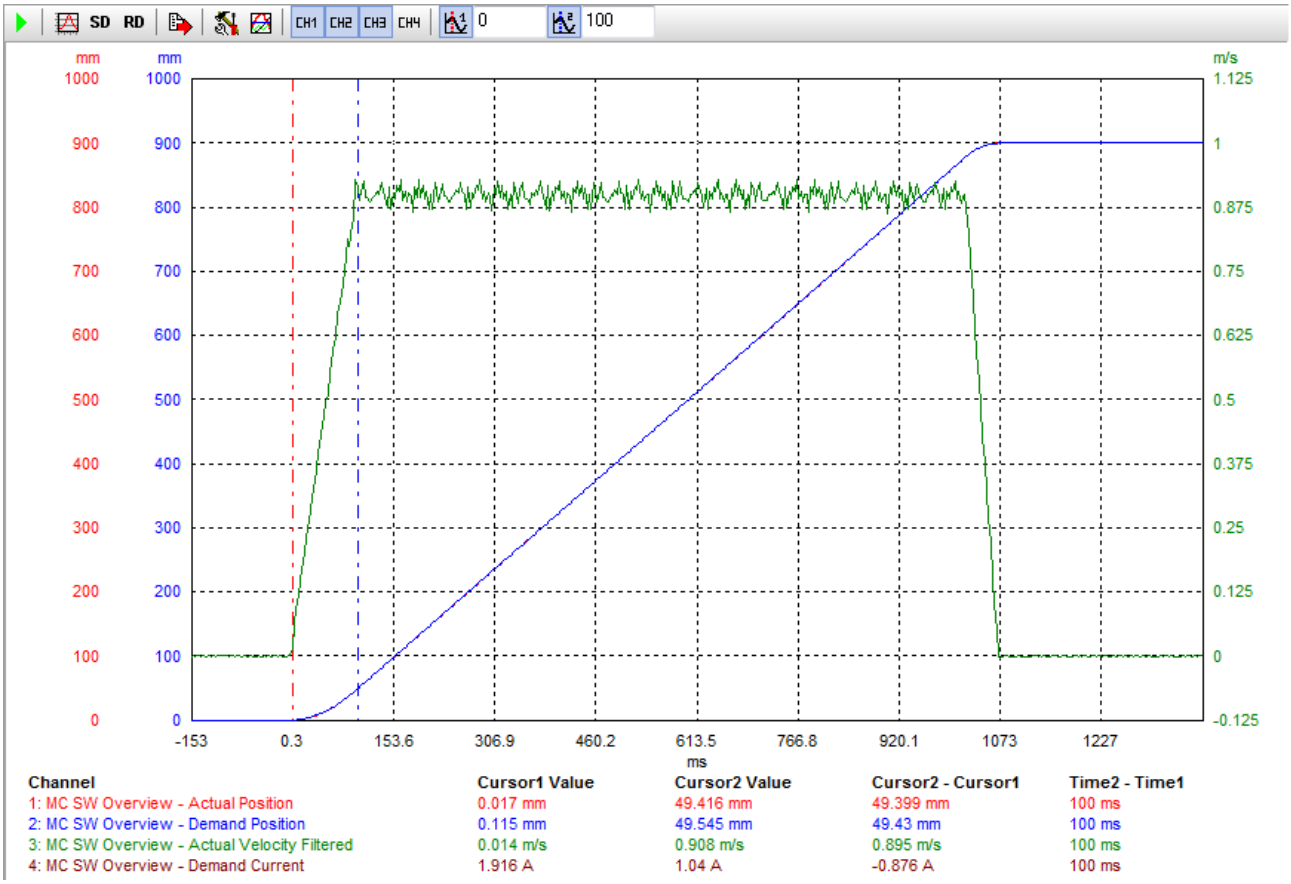

Picture: LinMot-Talk - Oscilloscope

Notes on operating the Linear-Rotary Motor

Running in the mechanical end stop may damage the motor

During operation the linear motor must not be allowed to strike the upper or lower internal stops, as this can cause damage to the Linear-Rotary motor. The internal stops can be used for homing purposes, but the homing speed must not exceed the value of 0.01 m/s. Specially by using a MagSpring for the weight balancing and no payload is attached, the MagSpring may shoot the unit into the internal stop and damage the unit! Use an external stop ring attached to the rod or cable tie holding an adapter to prevent this situation. -->Do not remove the stop ring/cable tie as long as no payload is mounted!

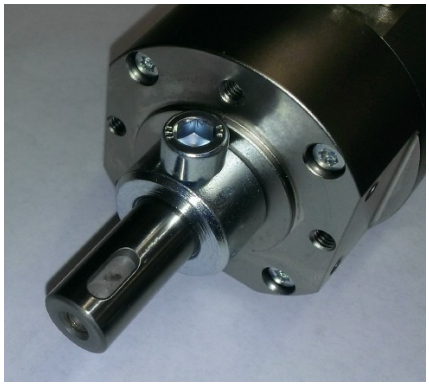

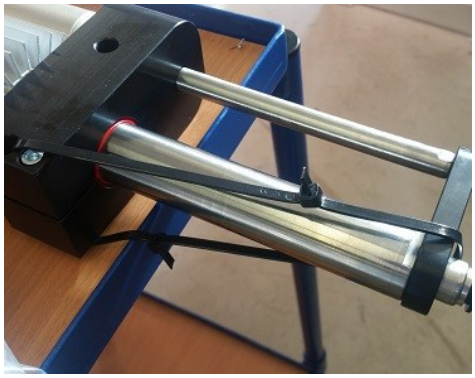

Pictures: External stop ring attached to the rod / cable tie holding an adapter

Strategy for the linear and rotating movement

The Linear-Rotary motor is designed to execute linear and rotary motions simultaneously. This means that the rotary and linear motions can be executed simultaneously and completely independent of one another. If the application permits, however, the following guidelines should be followed for physical technical reasons:
Rotary motions should be performed with the linear axis retracted if possible, as this can reduce vibrations and mechanical loads due to asymmetrical load mass. Execute rotary and linear motions sequentially, which makes the load on the electrical power source more uniform and thus leads to greater energy efficiency.

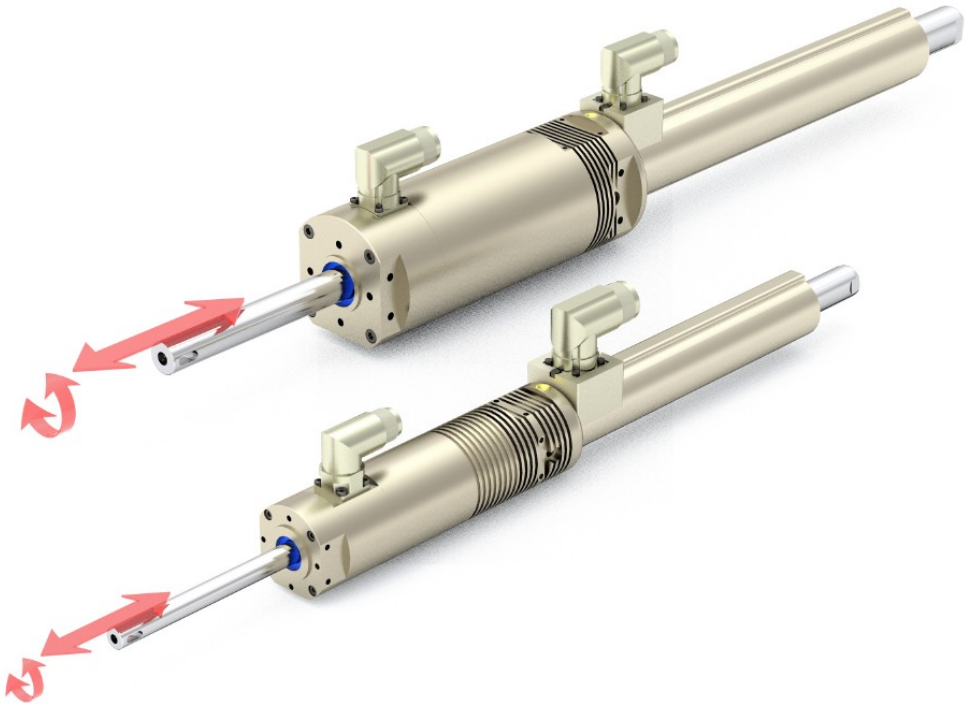

Linear-Rotary Motors with planetary gear

Linear-rotary motors with planetary gear will be used in all applications with high moment of inertia or high torque requirement.

Model 52 with planetary gear

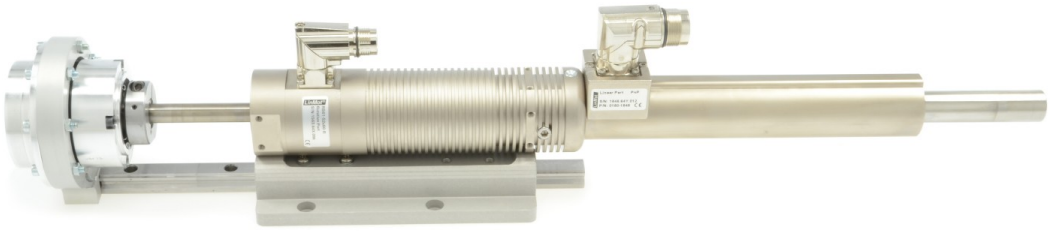

Model 84 with planetary gear

Stainless steel variant of the PR01-84x80-SSC series

In addition to standard Linear-Rotary Motors, variants made of chromium steel are available in the PR01-84 series. Both the front flange and the rotary axis are made of chromium steel 1.4404 (V4A). The rotary axis is sealed against the stator.
For maintenance purposes, the front Part of the flange, where the seals and guides are located, can be removed. The Linear-Rotary motor does not need to be removed from the system in order to remove the flange.

Picture: Linear-Rotary Motor PR01-84x80-SSC-C/ 48x240F-C-150

Picture: Front part of the flange, includes sealing and bearings, can be replaced easily. Normally the complete front part with all seals and bearings will be replaced. In case that the seals and bearings are only cleaned the following lubricant has to be used: “fin food Grease 2” from INTERFLON

Notes on application of the PR01-84x80-SSC series

The design of the machine should consist of a 'normal' and a 'stainless steel' zone. The 'stainless steel zone' can be cleaned accordingly during operation. The two zones are separated by a stainless steel plate. The flange of the Linear-Rotary motor, also made of stainless steel, is inserted through this steel plate. The cylindrical front end of the flange has a groove with an O-ring that acts as a seal between the 'normal' and the stainless steel zones.

Picture: O-ring for sealing between 'normal' and 'stainless steel' zone .

Notes on cleaning the SSC variants

The rotary axis should not be set in motion while the line is being cleaned. It should be either fully extended or fully retracted. The chromium steel zone has IP65 class protection. The seals are made from FKM fluorelastomer and 85 AU 20991 polyester-urethane rubber.

Note

Linear-Rotary units with new or replaced seals will show an increased friction on both movements (linear and rotation) during the first hours of operation.

Special Application

Example: Linear-Rotary motors on a turntable

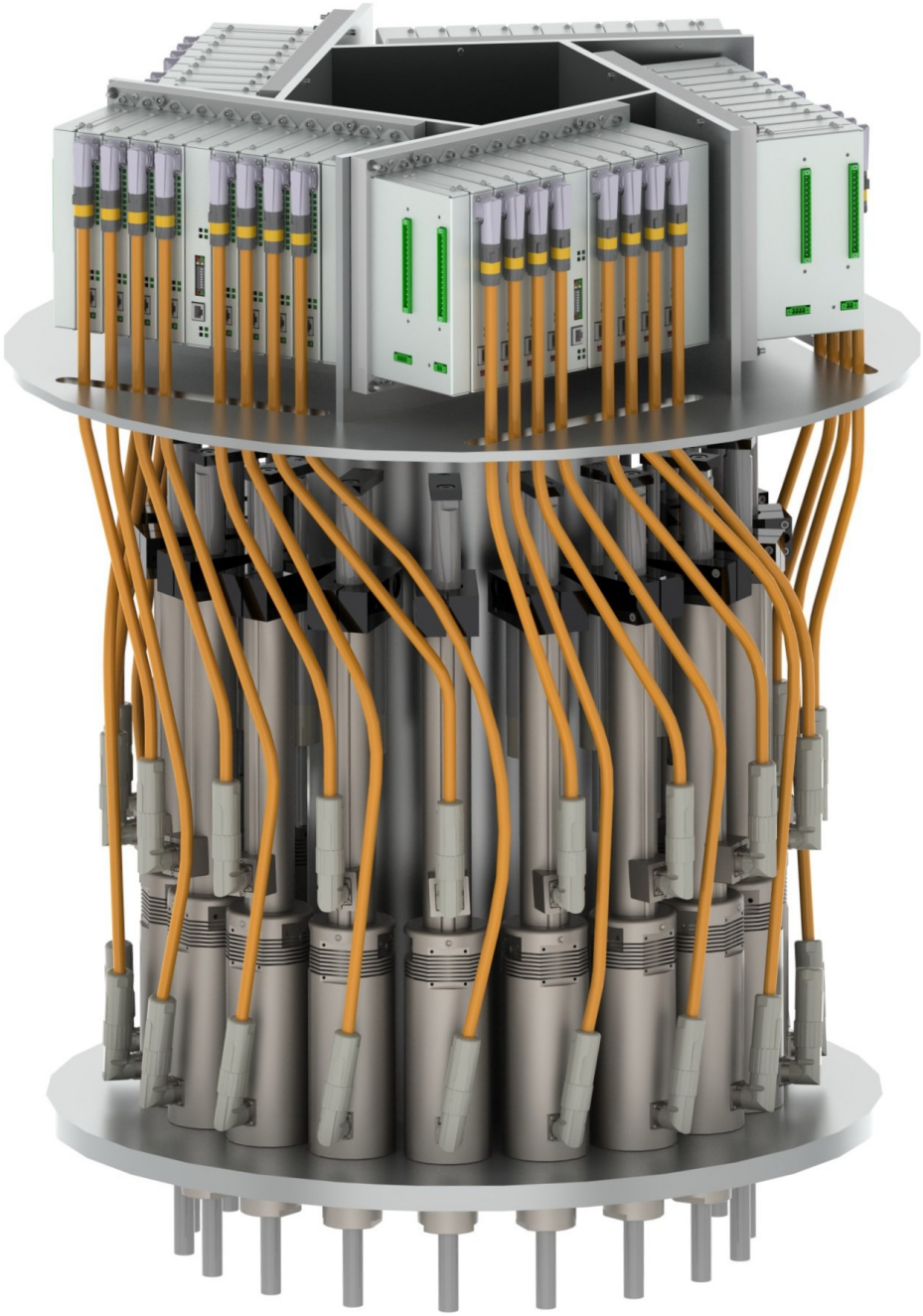

Picture: Typical arrangement of a system with Linear-Rotary motors and drives on a turntable. The lowest turntable is the divider between the 'stainless steel' and 'normal' zones. The drives for actuating the motors are located above the Linear-Rotary motors.

Cam profile for E-stop in applications with rotary disk

A fast turning rotary disk can not be stopped quickly during a loss of power emergency. This means the linear-rotary motor could be damaged if the rod is unpowered in the extended position and collides with other fixtures or tooling. An emergency guide profile at the point of possible collision helps to solve this situation by lifting the slider motor into the up position to prevent damage to other machinery.

The following picture shows a possible application of a Cam kit MF01-PK84 (Part-No 0250-2324). Cam kit forces the Linear Rotary Motor trough the pulley upwards.

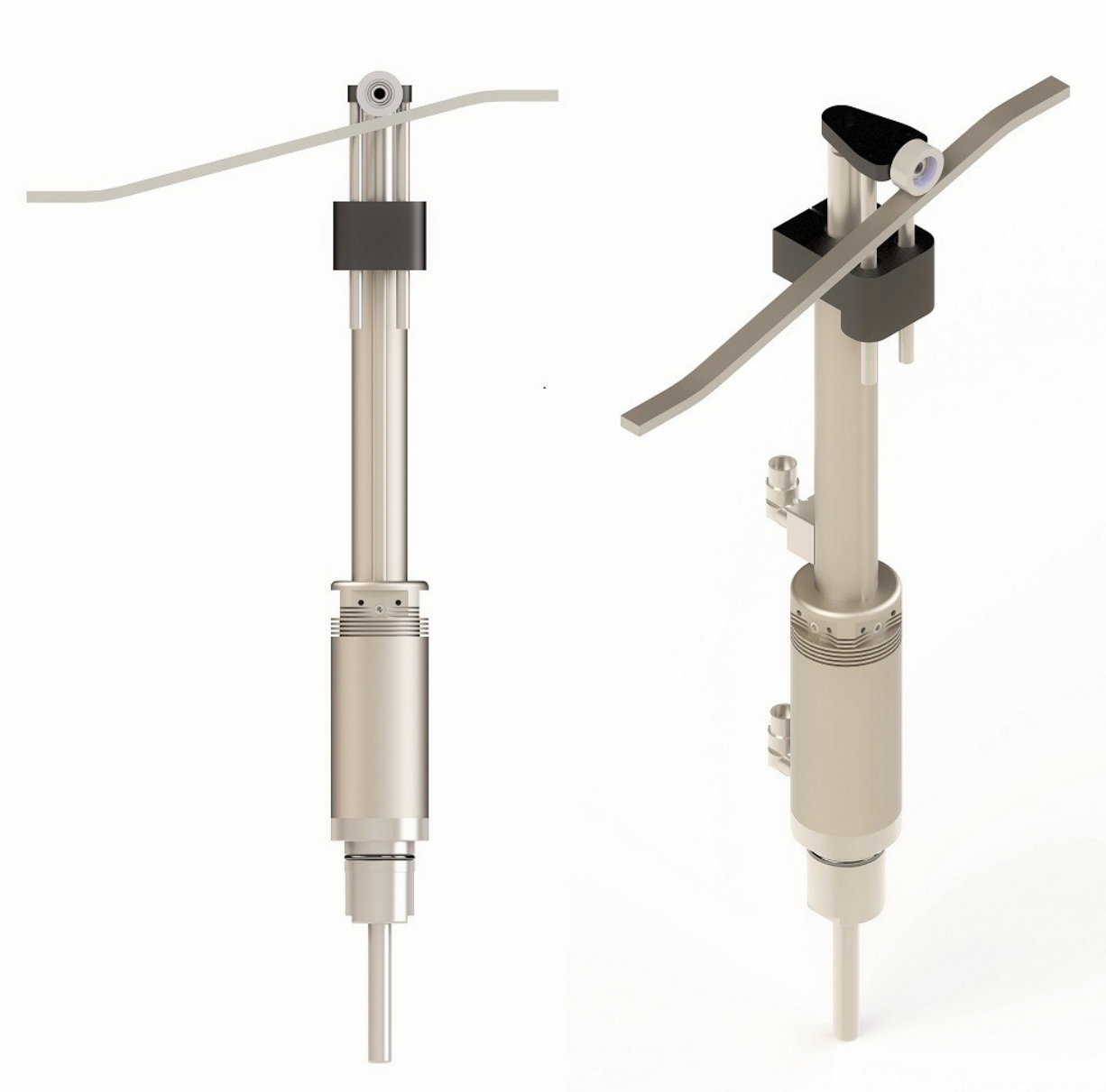

Picture: At the critical position the crank forces the moving part of the linear-rotary motor up in case of a power breakdown. (Caution: Mechanical end stop is not shown!)

Caution: Make sure that the Cam kit or any other auxiliary equipment that pulls or pushes the Linear-Rotary Motor upwards has its own mechanical stop. Linear-Rotary Motor internal collisions may not be used as an end stop in any case. Using Linear-Rotary Motor internal collisions may damage the unit. In addition the motor must be supported (see chapter Installing Linear-Rotary Motors) to absorb any side load of the crank.

Installing Linear-Rotary Motors

The PR01 Linear-Rotary motors have a center fit on the front side so that the rotary axis can be precisely aligned. Due to the narrow construction of the Linear-Rotary motors, it is most often not sufficient to mount them by the front bolts alone (due to vibration or lateral loads). An additional support is then necessary. From a technical point of view the support should be done at the end of the motor to reduce any oscillations. Note that tolerances must be compensated (e.g. through long holes) to eliminate any tension to the motor between the two mounting points.
The following sketches show examples of the various possibilities. The chapter on installation drawings contains detailed dimensions.

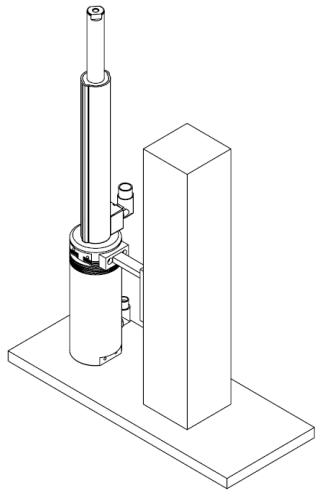	Front mounting with side support
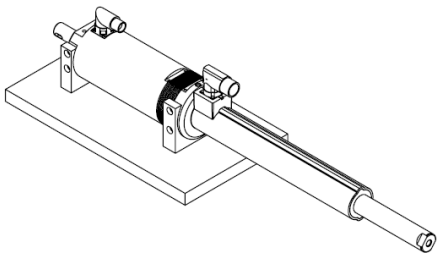	Bottom mounting, mounted through linear-rotary side mounting holes Compensate tolerance using a washers (if necessary), when the linear-rotary is fixed through bottom mounting holes
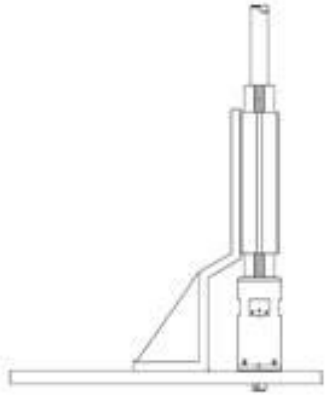	Angle and heat sinks support

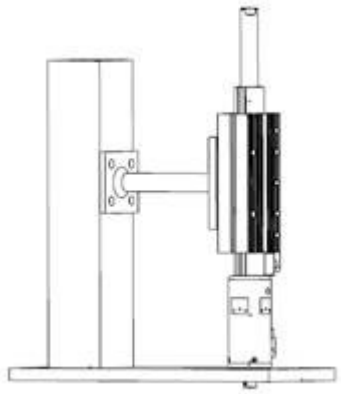	Support through cooling flange side section
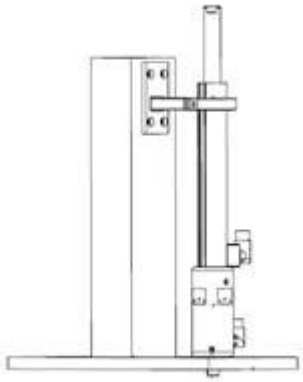	Support through the side section at the end of Linear motor
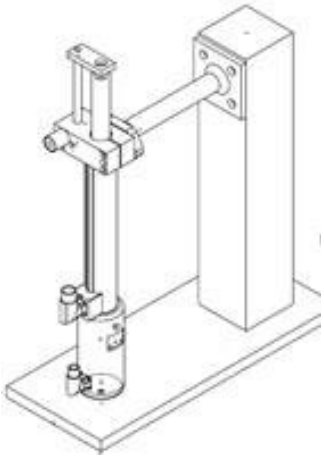	Support through the Multifunction-Flange side section

Drawings of Linear-Rotary motors with accessories

	Linear-Rotary Motor without accessories
	Linear-Rotary Motor Motor with backside whipper
	Linear-Rotary Motor with fan kit for cooling of the Rotary Motor

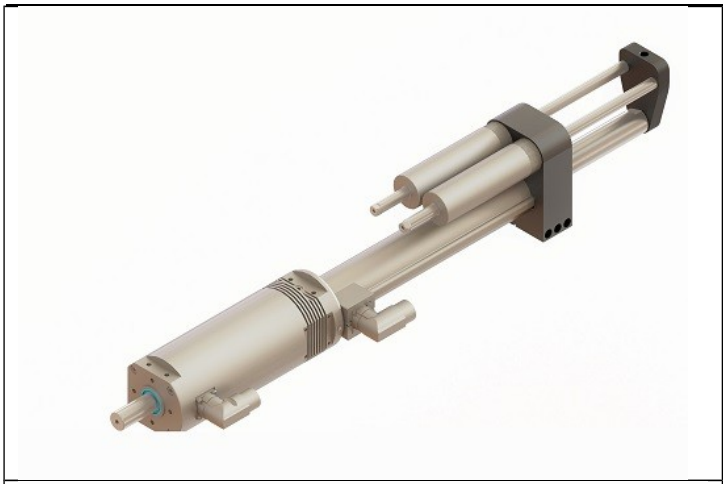	Linear-Rotary Motor with two MagSprings
	Linear-Rotary Motor with Cam kit
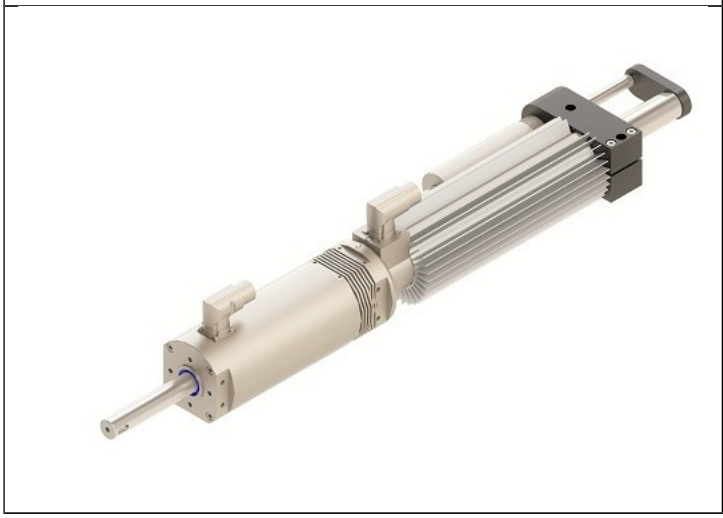	Linear-Rotary Motor with MagSpring kit UNO, mounting and heat sinks

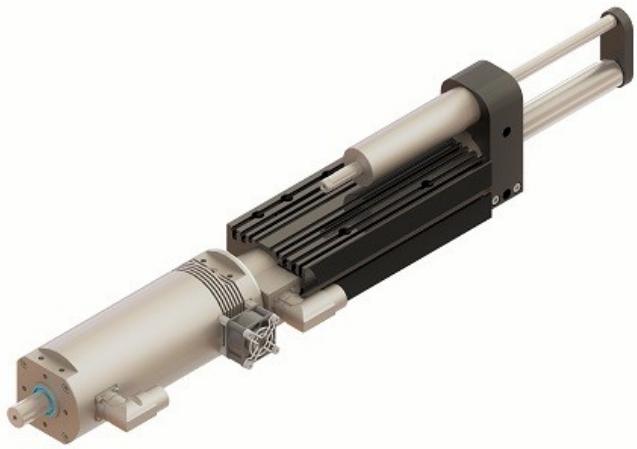	Linear-Rotary Motor with MagSpring kit UNO, and flange

CAD-Files

CAD files and STEP files can be downloaded from the CAD download area on the webpage at www.LinMot.com. .

Accessories

Heat sinks for linear motors

The following heat sinks, in various lengths, help to cool the linear motor.

Option heat sink for linear motor PS01-37x120F-HP-C-..

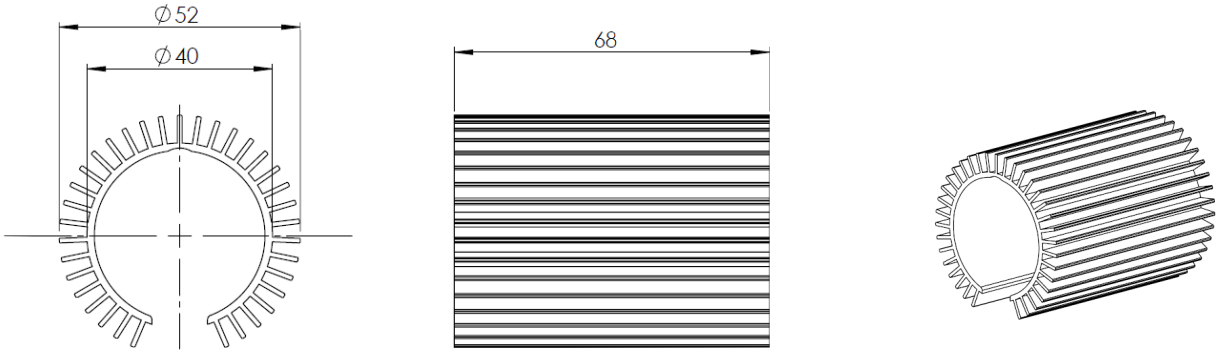

Article	Article	L [mm]			Mass [kg]	Part- No
PC01-37x68	heat sink	68			0.07	0160-2131

Option heat sink for linear motor PS01-48x240F-C-... and PS01-48x360F-C-...

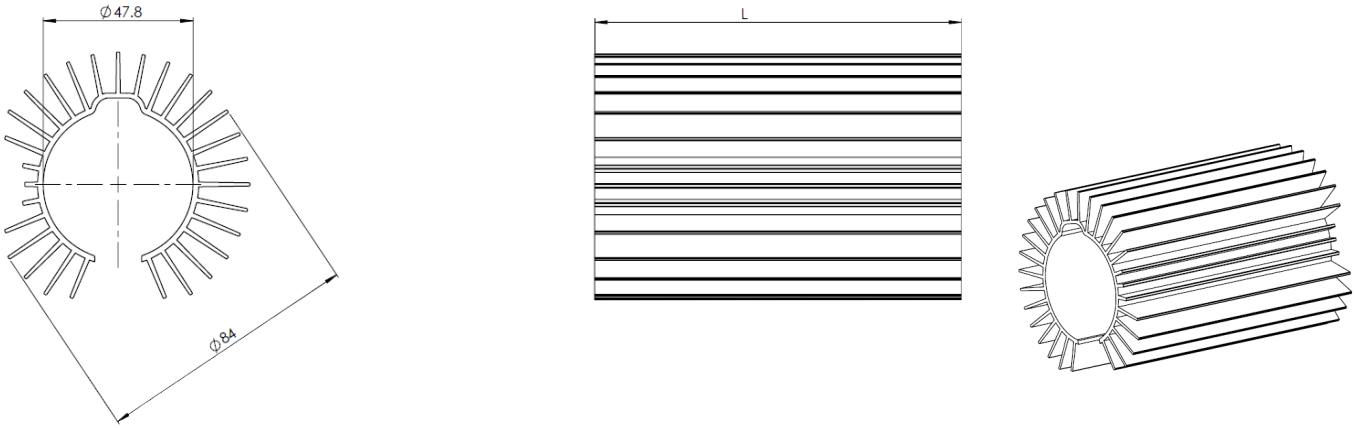

Article	Article	L [mm]		Mass [kg]	Part- No
PC01-48x100	heat sink	99		0.21	0160-2145
PC01-48x117	heat sink	117		0.25	0160-2138

Mounting and cooling flange for linear motors

The following flanges, in various lengths, are used to mount the Linear-Rotary motor as well as cool the linear motor.

Option mounting and cooling flange for Linear Motor PS01-37x120F-HP-C-..

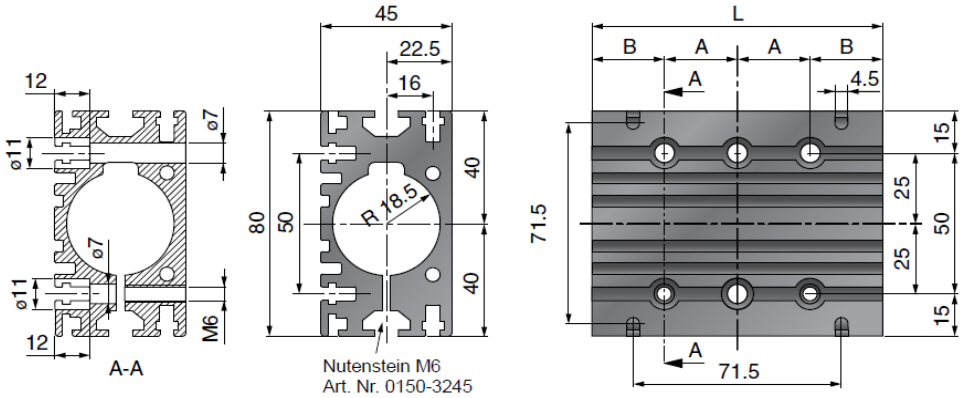

Article	Article	L [mm]	A [mm]	B [mm]	Mass [kg]	Part- No
PF02-37x100	Flange 37x100 mm	100	25	25	0.45	0150-1998
PF02-37x140	Flange 37x140 mm	140	50	20	0.63	0150-2105

Option mounting and cooling flange for Linear Motors PS01-48x240F-C-... PS01-48x360F-C-...

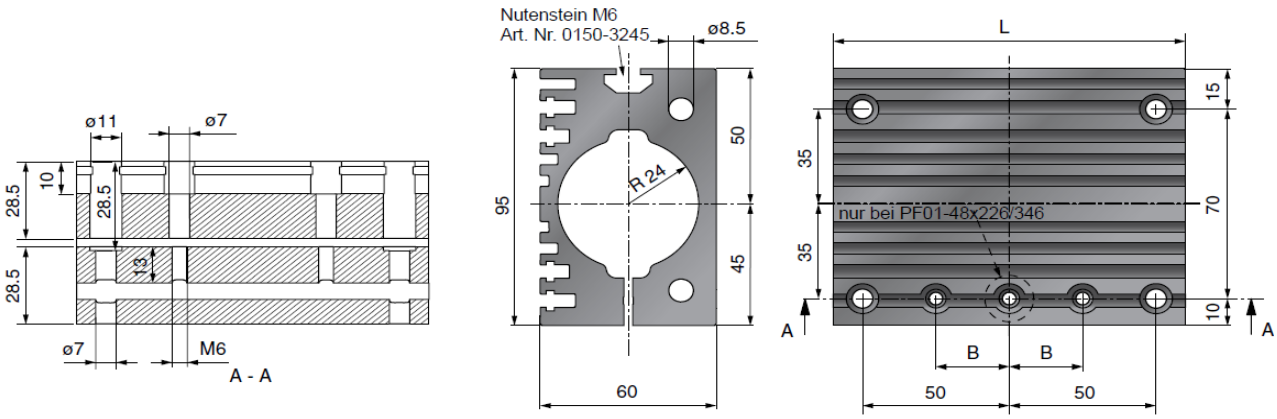

Article	Article	L [mm]	B [mm]	Mass [kg]	Part- No
PF01-48x120	Flange 48x120 mm	120	25	0. 97	0150-1976
PF01-48x226	Flange 48x226 mm	226	85	1.855	0150-2108

Fan kits

Fan kits are available for both the rotary motor and the linear motor. In general, forced ventilation allows the continuous torque or force to be increased (see design program).

Fan kits for Linear Motor

Option: Fan for Linear Motor PS01-37x120F-HP-C-..

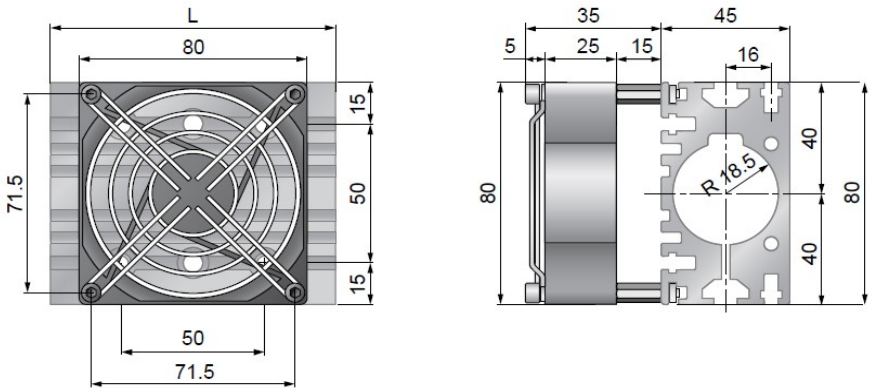

Connection: 24VDC / 120mA

Article	fan for	Part-No
HV01-37/48*	Fan Kit for H01-37, B01-37 and PF02-37	0150-5051

* order separate mounting and cooling Flange PF02-37x100 or PF02-37x140

Option: Fan for Linear Motor PS01-48x240F-C-.. / PS01-48x360F-C-...

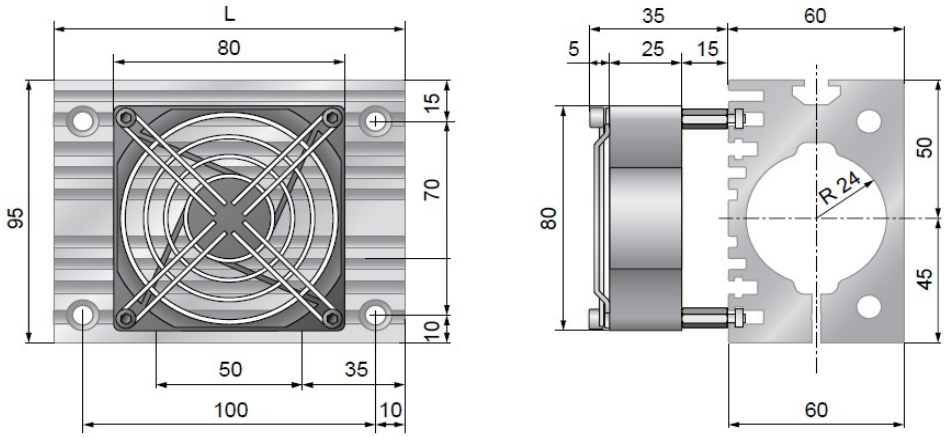

Connection: 24VDC / 120 mA

Article	fan for	Part-No
HV01-37/48*	Fan Kit for H01-48, B01-48 and PF01-48	0150-5051

* order separate mounting and cooling Flange PF01-48x120 or PF01-48x226

Fan kit for Rotary Motors

Option: fan for Rotary Motor model 52

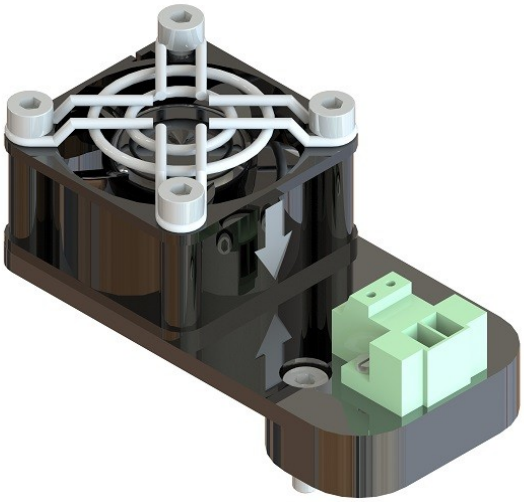

Connection: red= 24Vdc blue or black=GND

Article	fan for	Mass	Part-No
RS01-VA52-Kit	Rotary Motor RS01-52	0.075 kg	0150-1599

Option: fan for Rotary Motor model 84

Connection: red= 24Vdc blue or black=GND

Article	fan for	Mass	Part-No
RS01-VA84-Kit	Rotary Motor RS01-84	0.03 kg	0150-1600

Wipers

The rotary axis is protected against dirt and loss of grease by a wiper on the front side. The back side of the linear motor slider should also be protected by means of a wiper. The options 'wiper' and 'multifunctional flange' are available for this.

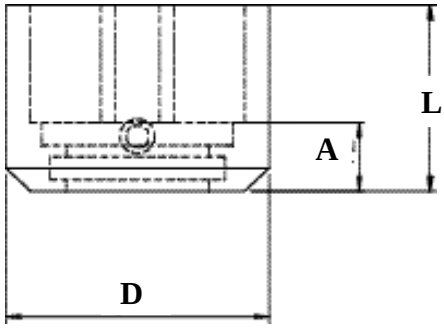

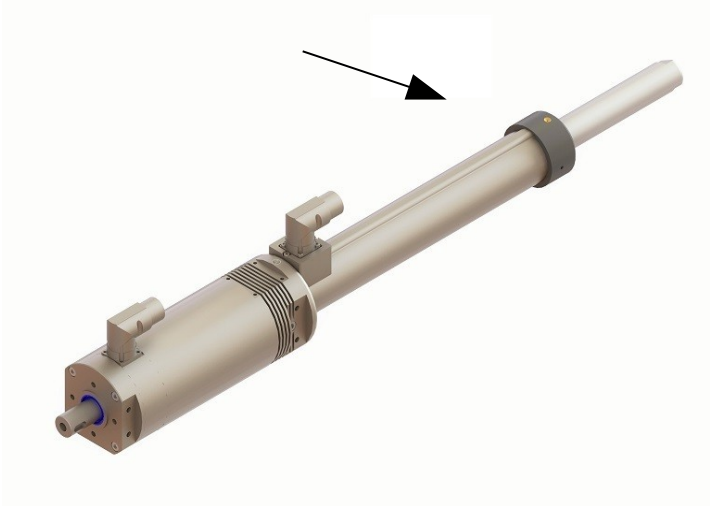

	Description	Part- No.	D	L	A	Mass
Wipers for model 52 PS01-37x120F-HP-C-..	PA01-37/20-F	0150-3126	45mm (1.77in)	32mm (1.26in)	12mm (0.47in)	0.028kg
Wipers for model 84 PS01-48x240F-C-... PS01-48x360F-C-...	PA01-48/28-F	0150-3127	58mm (2.28in)	32mm (1.26in)	14mm (0.55in)	0.056kg

Multifunction flange and MagSpring

The multifunctional flange can perform one or more of the following functions:

- Wiper for the linear motor slider
- Mounting a MagSpring spring for load compensation
- Mounting a pneumatic brake
- Mounting element for the Linear-Rotary motor

Effective force of the MagSpring

Depending on the orientation of the MagSpring slider, the effect of the force can be modified. This means that the MagSpring pulls the rotary axis of the Linear-Rotary motor inward, or pushes it outward.

Top: 'Pushing' MagSpring
Bottom: 'Pulling' MagSpring

Specially by using a MagSpring for the weight balancing and no payload is attached, the MagSpring may shoot the unit into the internal stop and damage the unit! Use an external stop ring attached to the rod to prevent this situation

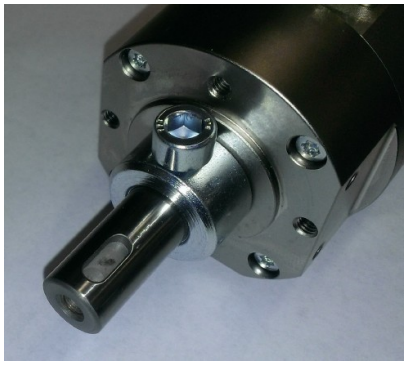

Picture: External stop ring attached to the rod

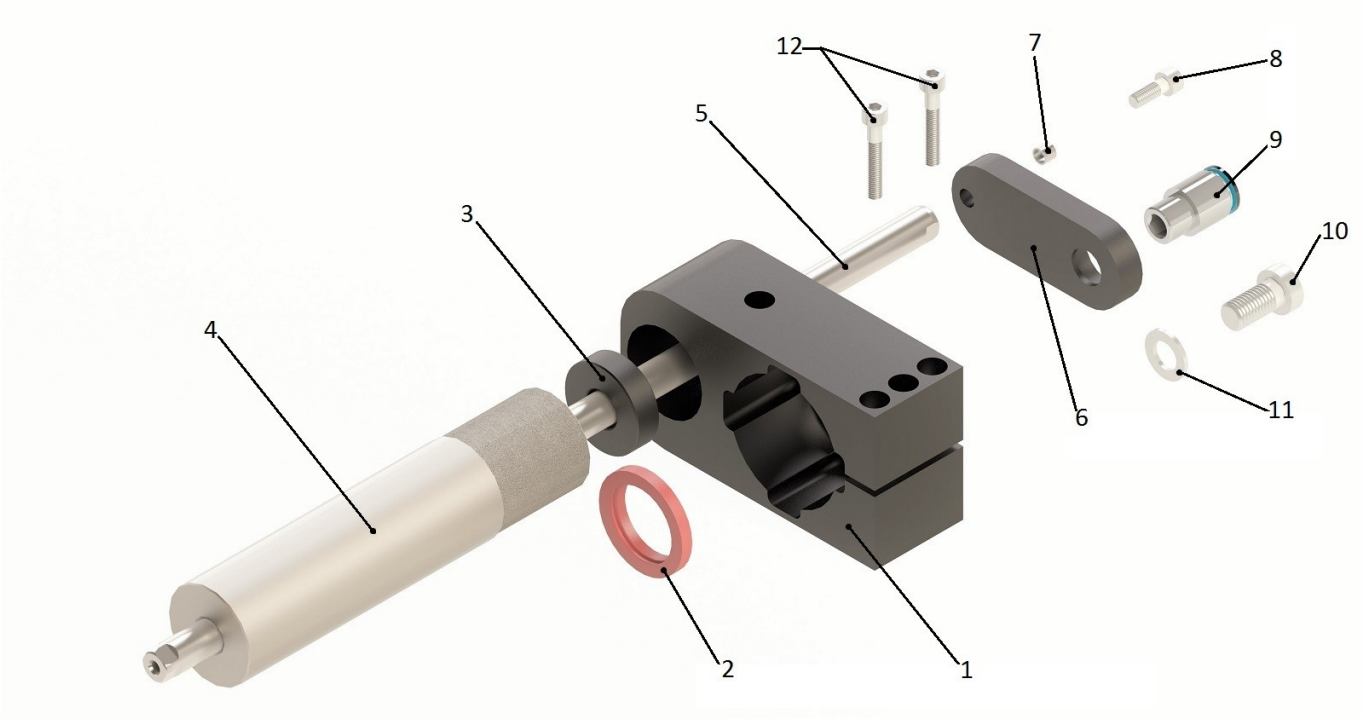

		Description / Part- No for **model 52 and 52 -L**		Description / Part.-No for **model 84 and 84- L UNO**
1	**Multifunction flange**	MF01-PR01-52x40-20 Part.-No 0250-2322 for 20 N MagSpring	MF01-PR01-52x40-37 Part.-No 0250-2319 for 40/60 N MagSpring	MF01-PR01-84x37-1 Part.-No. 0250-2337
2	Wiper	PAW01-20 / Part.-No. 0150-3112 (delivered with Pos 1)		PAW01-28 / Part.-No. 0150-3133 (delivered with Pos 1)
3	Spacer washer			Spacer washer (delivered with Pos 1)
4	**MagSpring Stator**	22 N force MS01-20x140 Part.-No. 0250-2201	40 N force MS01-37x155 Part.-No. 0250-2204 60 N force MS01-37x155 Part.-No. 0250-2204	60 N force MS01-37x155 Part.-No. 0250-2204
5	**MagSpring Slider**	22 N force ML01-12x350/160-20 Part.-No. 0250-2321	40 N force ML01-12x350/160-10 Part.-No. 0250-2333 60 N force: ML01-12x350/160-20 Part.-No. 0250-2321	60 N force ML01-12x350/160-20 Part.-No. 0250-2321
6	**MagSpring Adapter**	MA01-PR01-52-37/20 Part.-No. 0250-0128		MA01-PR01-84x80-37x1 Part-No. 0250-2341
7	Spacer sleeve	MA01-PR01-Huelse 4,9 Part.-No. 0250-0123 (delivered with Pos 6)		MA01-PR01-Huelse 4,9 Part.-No. 0250-0123 (delivered with Pos 6)
8	Socket screw	M5x14 / ISO 4762 (delivered with Pos 6)		M5x14 / ISO4762 (delivered with Pos 6)
9	Pneumatic fitting	for 6mm hose 1/8'' (delivered with Pos 6)		for 10mm hose 1/ 4'' (delivered with Pos 6)
10	Socket screw	M8x18 / ISO 4762 (delivered with Pos 6)		M10x20 / DIN 7984 (delivered with Pos 6)
11	Adjusting washer	M8 (delivered with Pos 6)		M10 (delivered with Pos 6)
12	Socket screws	2x M5x30 / ISO 4762 (delivered with Pos 1)		2x M5x35 / ISO 4762 (delivered with Pos 1)

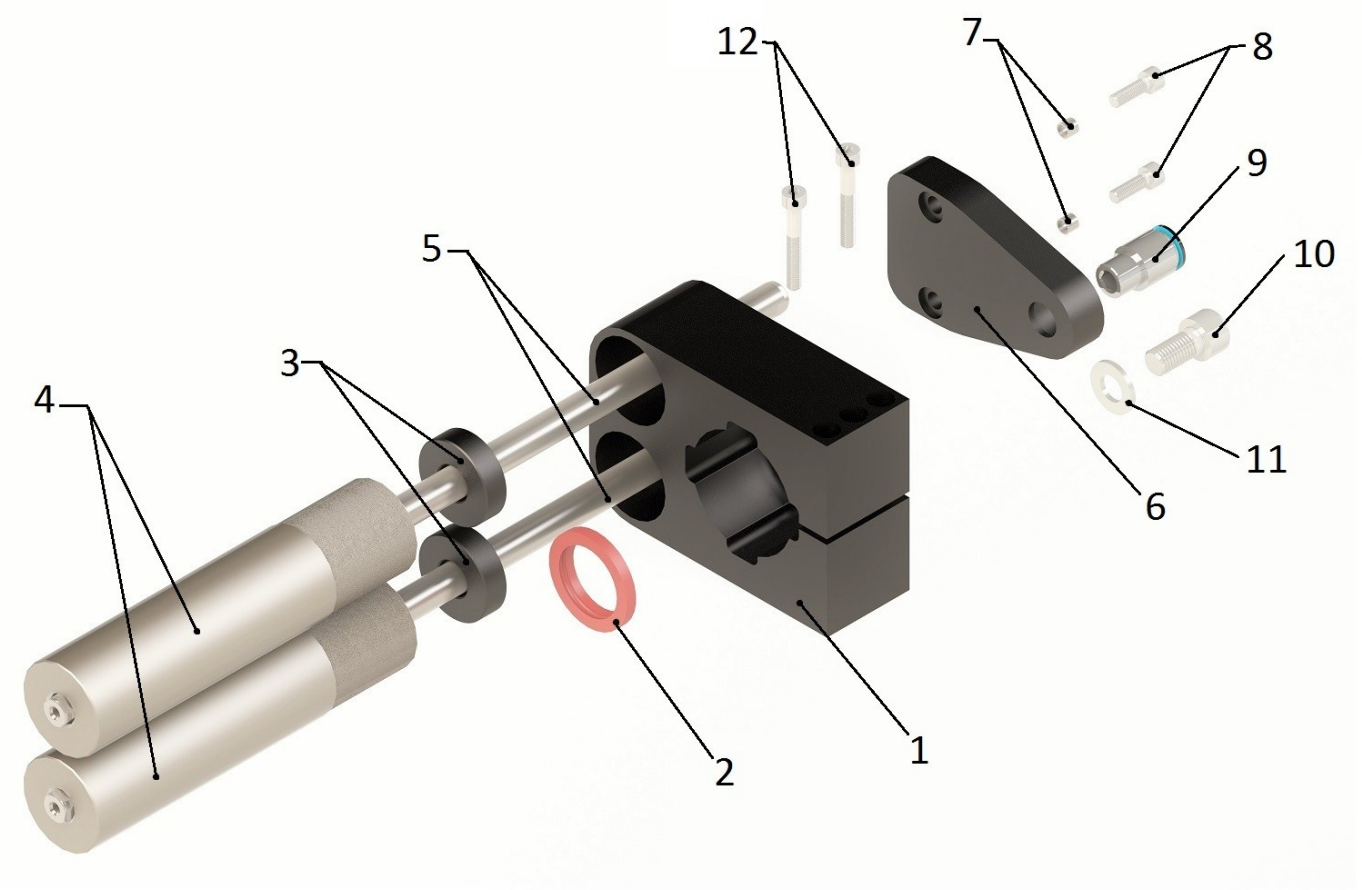

		Description / Part.-No for **model 84 DUO and 84 -L DUO**
1	**Multifunction flange**	MF01-PR01-84x37-2 / Part.-No. 0250-2338
2	Wiper	PAW01-28 / Part.-No. 0150-3133 (delivered with Pos 1)
3	Spacer washers	2x Spacer washers (delivered with 1)
4	**MagSpring Stators**	2x 60 N force 2x MS01-37x155 Part.-No. 0250-2204
5	**MagSpring Sliders**	2x 60 N force 2x ML01-12x350/160-20 Part.-No. 0250-2321
6	**MagSpring Adapters**	MA01-PR01-84x80-37-2 Part.-No. 0250-2340
7	Spacer sleeves	2x MA01-PR01-Huelse 4,9 Part.-No. 0250-0123 (delivered with Pos 6)
8	Socket screws	2x M5x14 / ISO 4762 (delivered with Pos 6)
9	Pneumatic fitting	for 10mm hose 1/ 4" (delivered with Pos 6)
10	Socket screws	M10x20 / DIN 7984 (delivered with 6)
11	Adjusting washer	M10 (delivered with Pos 6)
12	Socket screws	2x M5x35 / ISO 4762 (delivered with Pos 1)

Dimensions multifunction flanges for mounting of MagSpring Stator

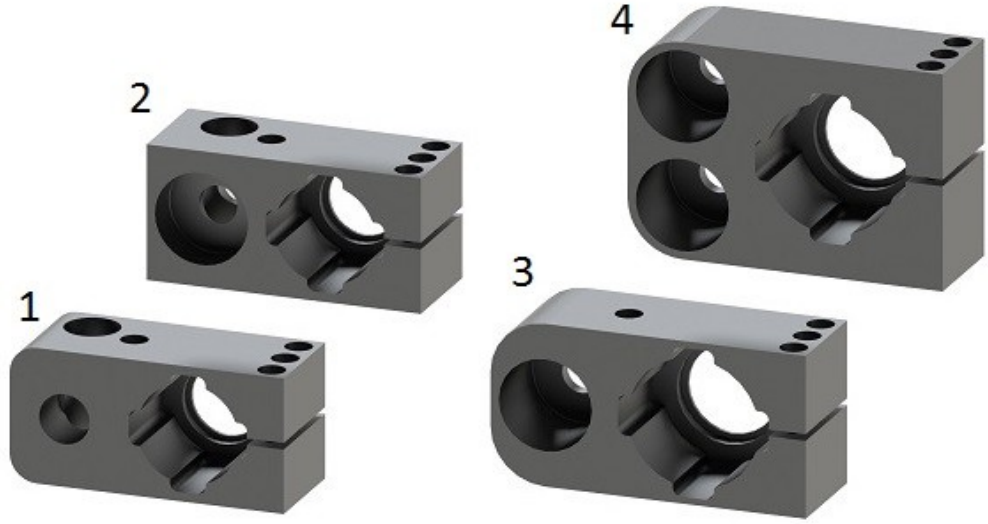

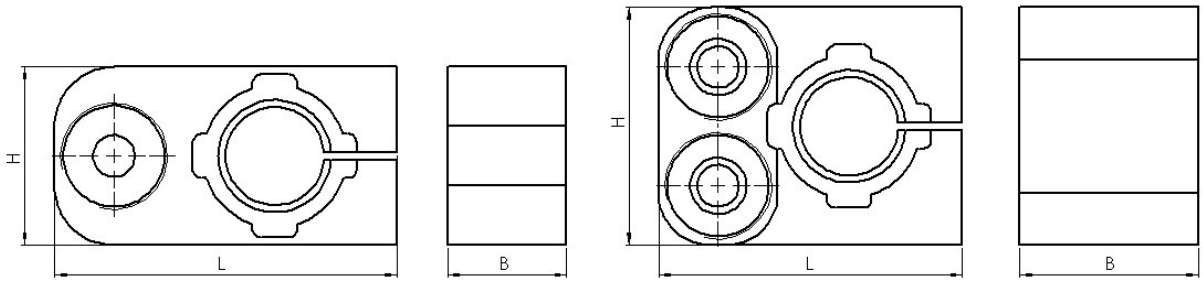

	Material: Al anodized	Description	Part- No	L	B	H	Mass
1	Multifunction flange for model 52 and MagSpring MS01-20-140	MF01-PR01-52x40-20	0250-2322	100 mm	40 mm	50 mm	0.33 kg
2	Multifunction flange for model 52 and MagSpring MS01-37-155	MF01-PR01-52x40-37	0250-2319	100 mm	40 mm	50 mm	0.31 kg
3	Multifunction flange for model 84 and MagSpring MS01-37-155	MF01-PR01-84x37-1	0250-2337	115 mm	40 mm	60 mm	0.425 kg
4	Multifunction flange for model 84 and 2x MagSpring MS01-37-155	MF01-PR01-84x37-2	0230-2338	115 mm	40 mm	80 mm	0.590 kg

Dimensions adapter for mounting of MagSpring-Slider

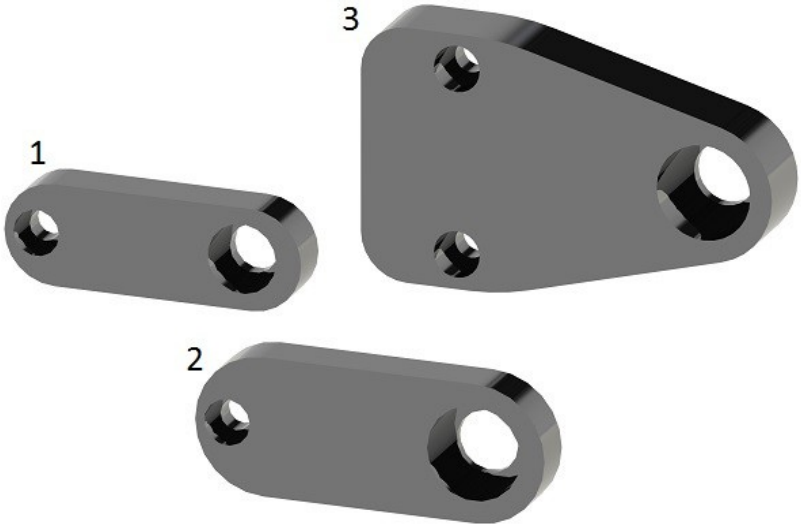

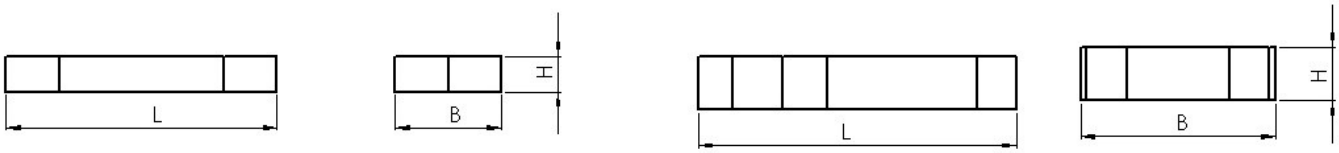

	Material: Al anodized	Description	Part- No.	L	B	H	Mass
1	Adapter for model 52	MA01-PR01-52x37/20	0250-0128	65 mm	22 mm	10 mm	0.05 kg
2	Adapter for model 84 and MagSpring MS01-37-155	MA01-PR01-84x80-37-1	0250-2341	76.5 mm	30 mm	10 mm	0.085 kg
3	Adapter for model 84 and 2x MagSpring MS01-37-155	MA01-PR01-84x80-37-2	250-2340	90 mm	55 mm	15 mm	0.186 kg

Cam kit MF01-PK84

Application as Emergency Crank

For the application as an emergency crank a pulley (not included) can be mounted at the side of the adapter (thread M10). Through can be ensured a forced movement in a linear direction.

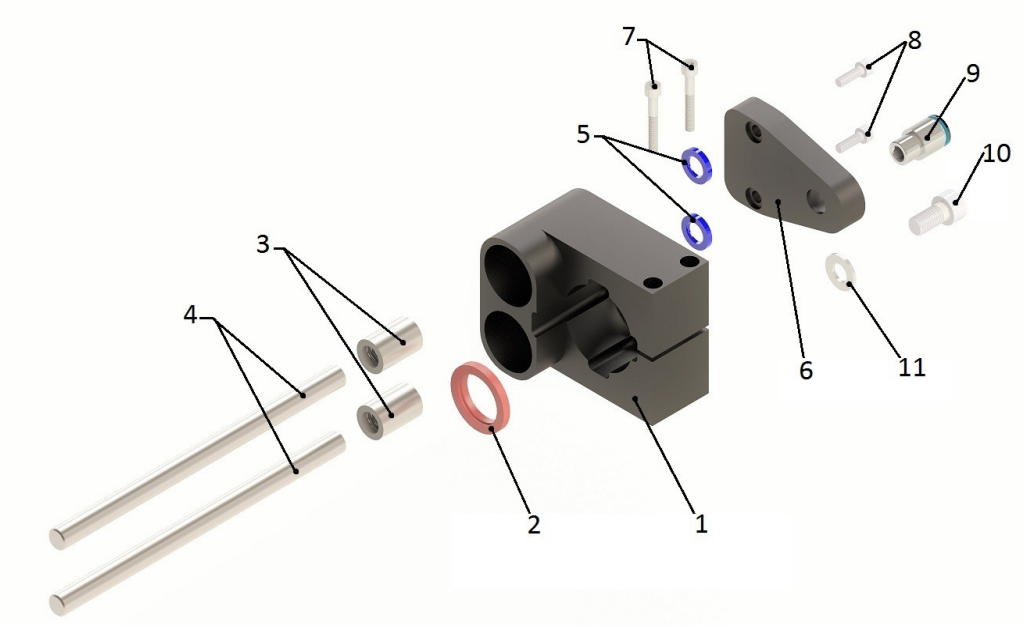

		Description / Part.-No. for **MF01-PK84** **Part.-No. 0250-2324**
1	Cam flange	MF01-PR01-84x80-K Part.-No. 0250-2323
2	Wiper	PAW01-28 Art.-No. 0150-3133
3	Linear ball bearings	2x LBBR 12-2LS Part.-No. 0230-0062
4	Guiding rods	2x MF01k-KS12x200 Länge 200 mm Part.-No. 0260-0134
5	Shaft seals	2x SP-12x19x3 Part.-No. 0230-0018
6	Cam kit adapter	MA01-PR01-84x80-K Part.-No. 0250-0130
7	Socket crews	2x M5x35 / ISO 4762
8	Schrauben Inbus	2x M5x14 / ISO4 762
9	Pneumatic fitting	for 10mm hose 1/ 4”
10	Socket screw	M10x20 / DIN 7984
11	Adjusting washer	M10

Order information: 0250-2324 Cam kit MF01-PK84 (incl. 1 - 11)

Dimensions Cam flange

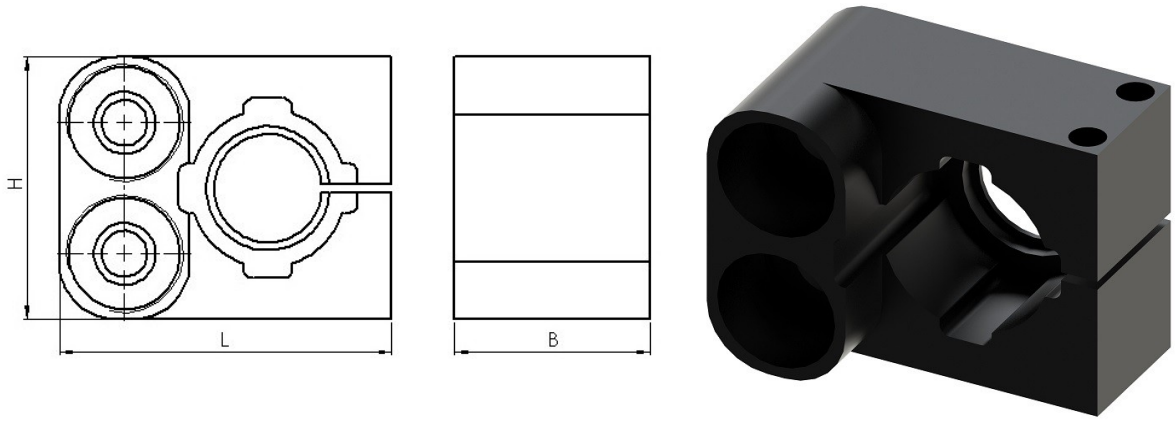

Material: Al anodized	L	B	H	Mass
Cam flange – individual part	102 mm	60 mm	80 mm	0.610 kg

Dimensions Cam adapter

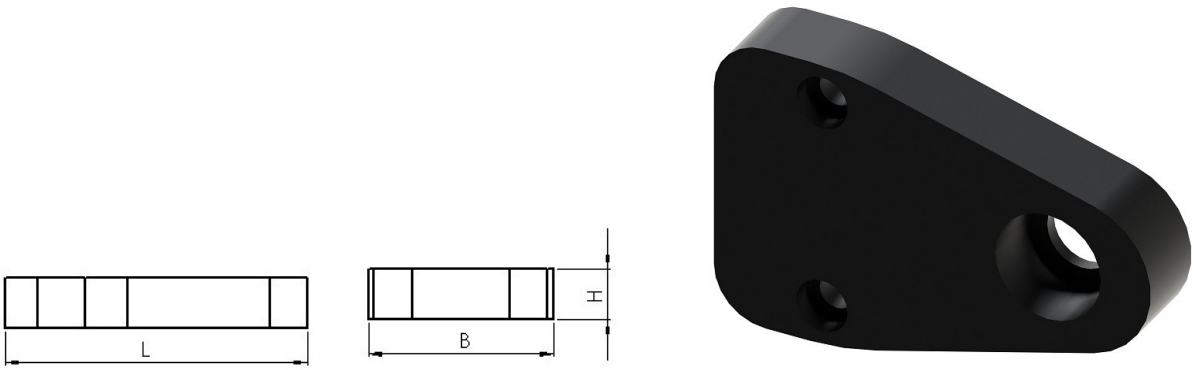

Material: Al anodized	L	B	H	Mass
Cam adapter – individual part	85 mm	55 mm	12 mm	0.125 kg

Magnetic spring *MagSpring®*

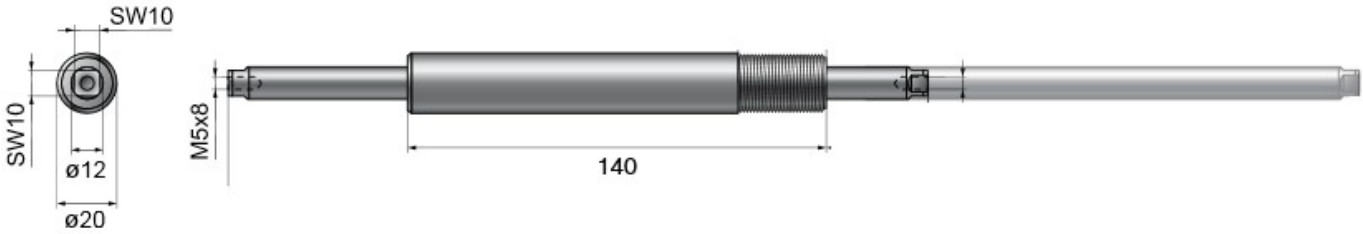

Dimension MagSpring Stator MS01-20x140

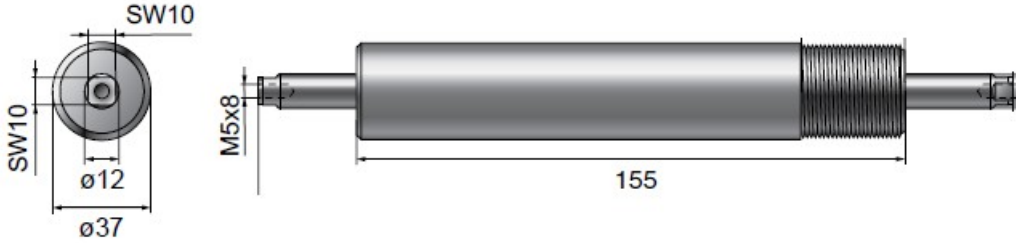

Dimension MagSpring Stator MS01-37x155

MagSpring Stator	Force (depending on slider)	Article	Part- No.	L	D	Mass
model 52	22 N	MS01-20x140	0250-2201	140 mm	20 mm	0.18 kg
model 52	40N / 60 N	MS01-37x155	0250-2204	155 mm	37 mm	0.88 kg
model 84	60 N	MS01-37x155	0250-2204	155 mm	37 mm	0.88 kg

MagSpring Slider	Force	Article	Part- No.	L	D	Mass
model 52	22 N	ML01-12x350/160-20	0250-2321	350 mm	12 mm	0.173 kg
model 52	40 N	ML01-12x350/160-10	0250-2333	350 mm	12 mm	0.175 kg
model 52	60 N	ML01-12x350/160-20	0250-2321	350 mm	12 mm	0.173 kg
model 84	60 N	ML01-12x350/160-20	0250-2321	350 mm	12mm	0.175 kg

Example:

Linear-Rotary Motor model 52 with MagSpring of force 40N: Stator: MS01-37x155
Slider: ML01-12x350/160-10

Linear-Rotary Motor model 52 with MagSpring of force 60N: Stator: MS01-37x155
Slider: ML01-12x350/160-20

Load attachment

Because both a rotary and a linear motion are performed, the type of attachment must be selected such that it can support both torques and longitudinal forces.

Clamp sets that enable fast, easy mounting of the load Mass are available as accessories. They provide a force-fit connection that is created by two conical rings. This completely eliminates the need for inserting lugs or producing grooves.

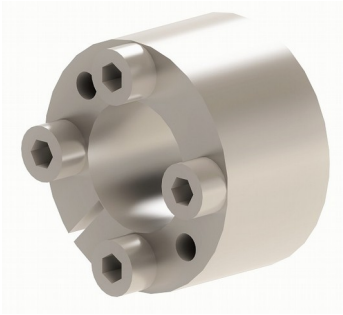

Technical data

RS01-SS12x22 : Tmax: 20Nm Fmax: 3kN Tolerance for fit D: 22H9 mm

RS01-SS20x38: Tmax: 160Nm Fmax: 15kN Tolerance for fit D: 38H9 mm

	Article	Part- No.	d	D	L	Lges	Mass
Clamp set for model 52	RS01-SS12x22	0230-0101	12 mm	22 mm	13 mm	15.5 mm	22g
Clamp set for model 84	RS01-SS20x38	0230-0100	20 mm	38 mm	21 mm	26 mm	100g

Connector assignment

Connector assignment Linear Motors

Stecker Typ	C-Connector
	Pin
Phase 1+	A
Phase 1-	B
Phase 2+	C
Phase 2-	D
+5V	E
GROand*	F
Sensor Sinus	G
Sensor Cosinus	H
Temp. Sensor	L
Shield*	Casing

Connector assignment Rotary Motors

Stecker Typ	C-Connector	R-Connector
	Pin	Pin
Phase A	A	1
Phase B	B	2
Phase C	C	3
NC	D	4
+5V	E	A
GROUND*	F	B
Sensor Sinus	G	C
Sensor Cosinus	H	D
Temp. Sensor	L	E
Schirm*	Gehäuse	Gehäuse

Extension cables are double shielded. The two shields of the extension cables must not be connected together: The inner shield of the extension cables is used as GROand and must be connected to GROand*, only the outer shield must be connected to SHIELD* of the connectors.

Caution: **Do not connect or disconnect motor when there is power on the controller.**

Double-check each connection!

Wrong connections can destroy controller and stator!

Drawings

Drawing PR01-52x40-R/37x120F-HP-C-80

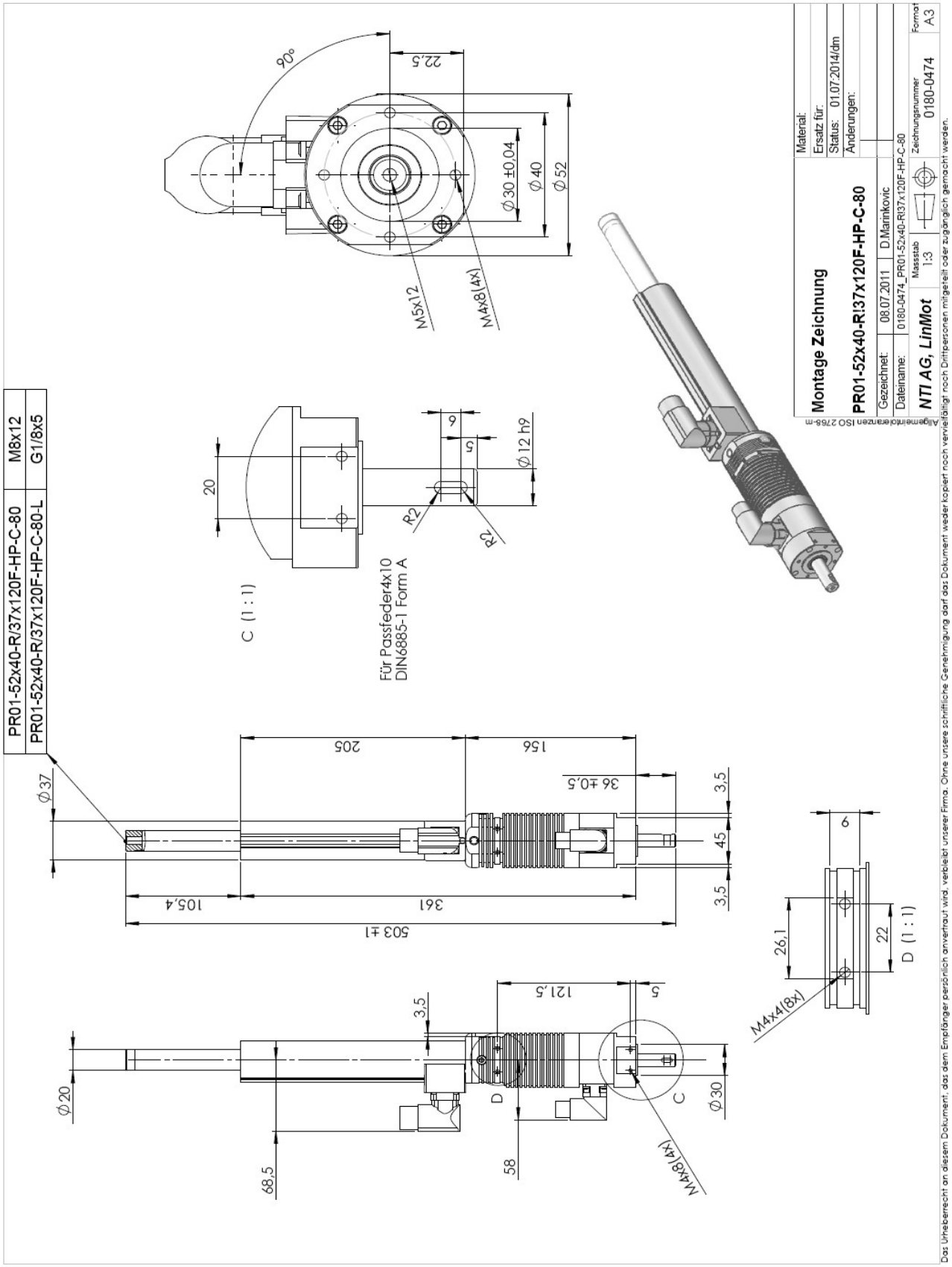

Stroke range PR01-52x40-R/37x120F-HP-C-80

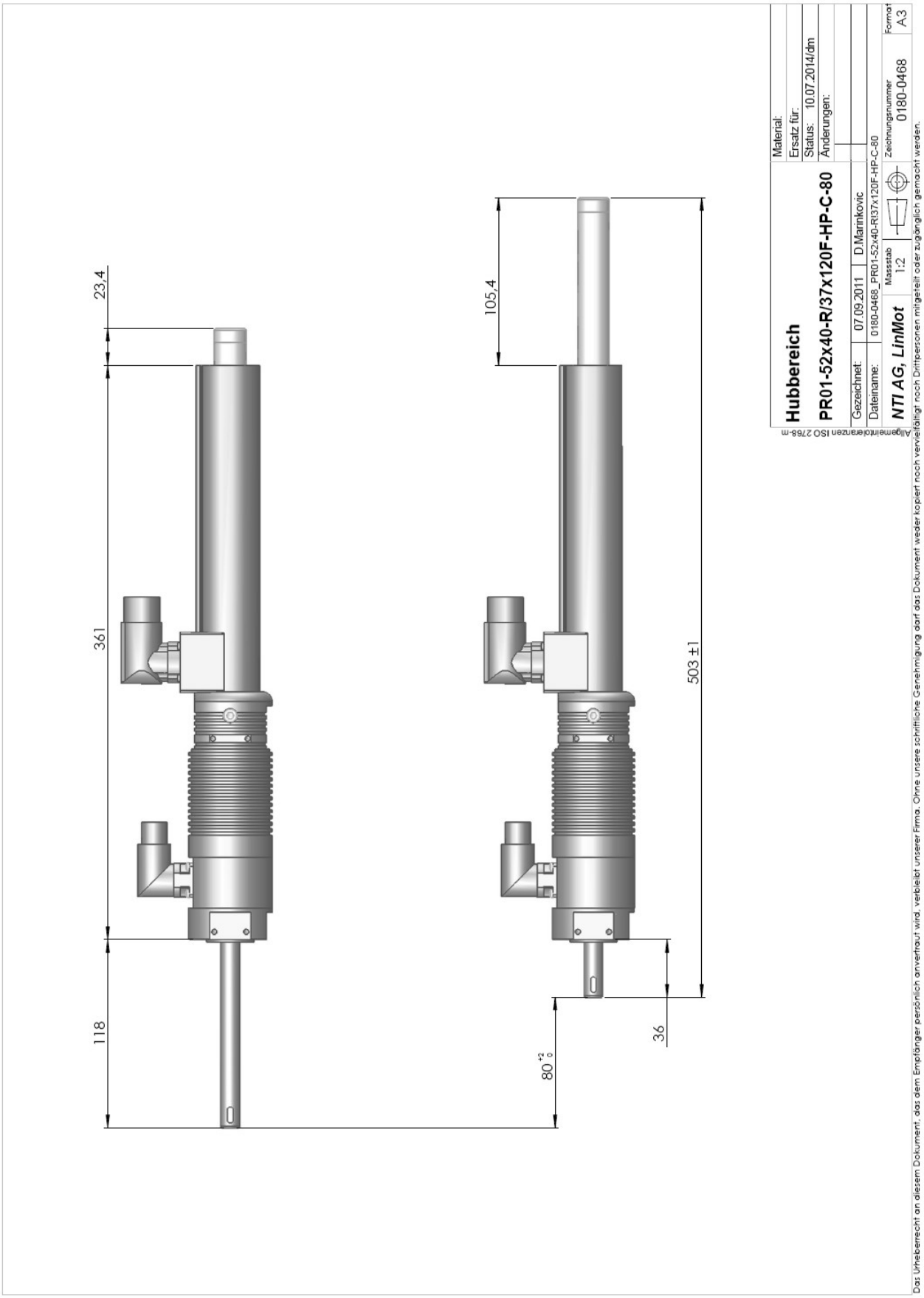

Drawing PR01-52x60-R/37x120F-HP-C-100

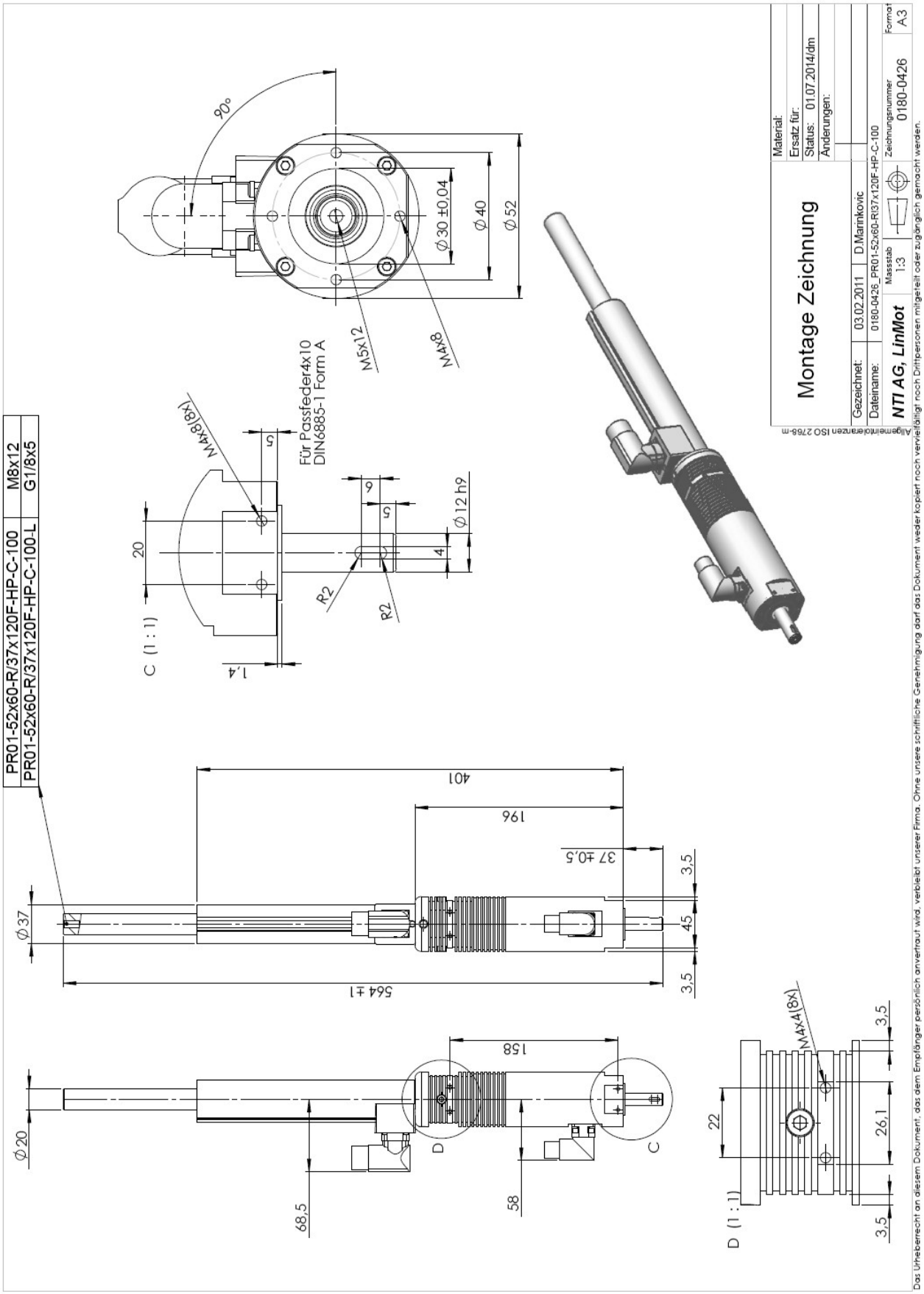

Stroke range PR01-52x60-R/37x120F-HP-C-100

.

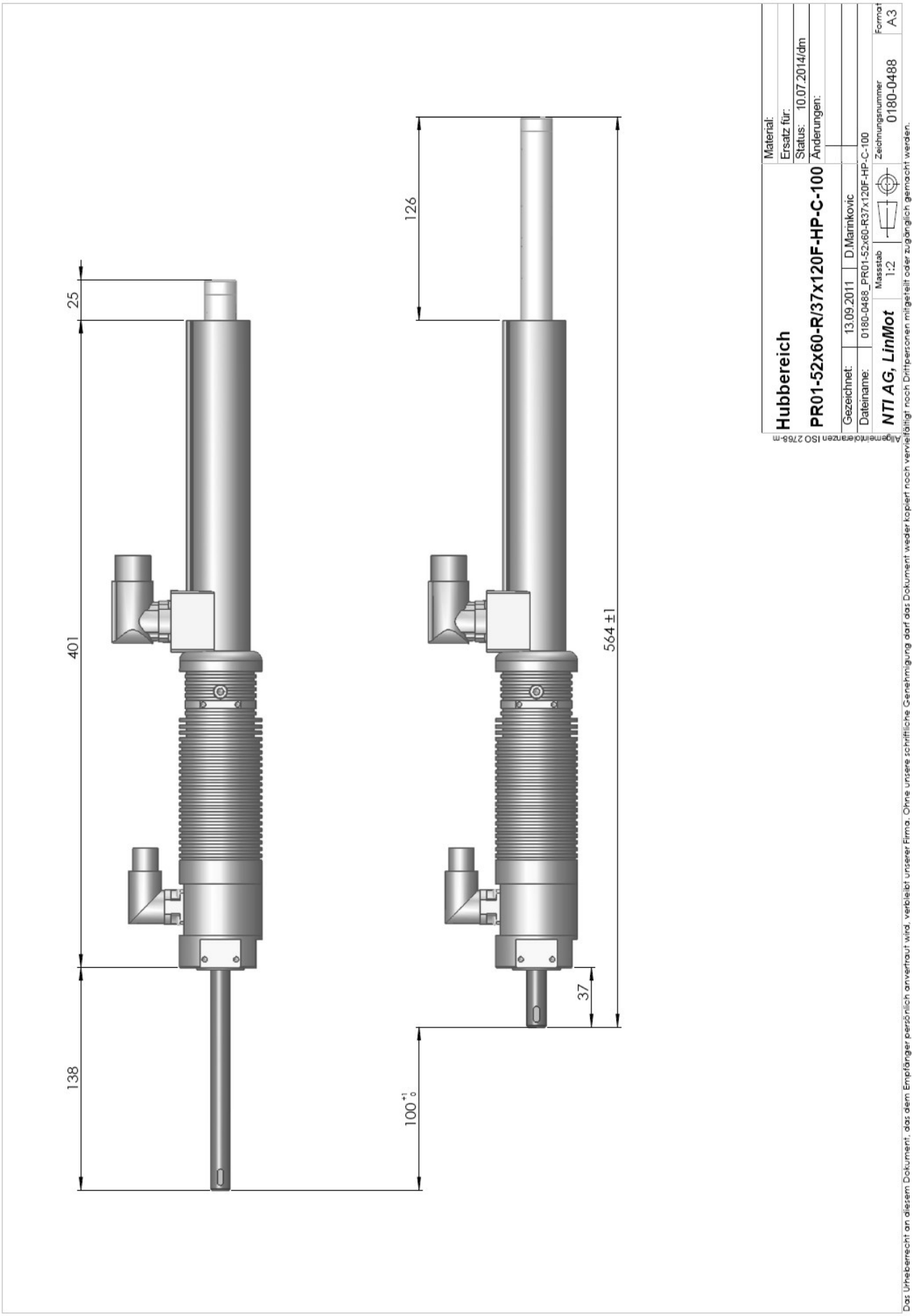

.

Drawing PR01-52x60-R/37x120F-HP-C-100 with Flange PF02-37x100

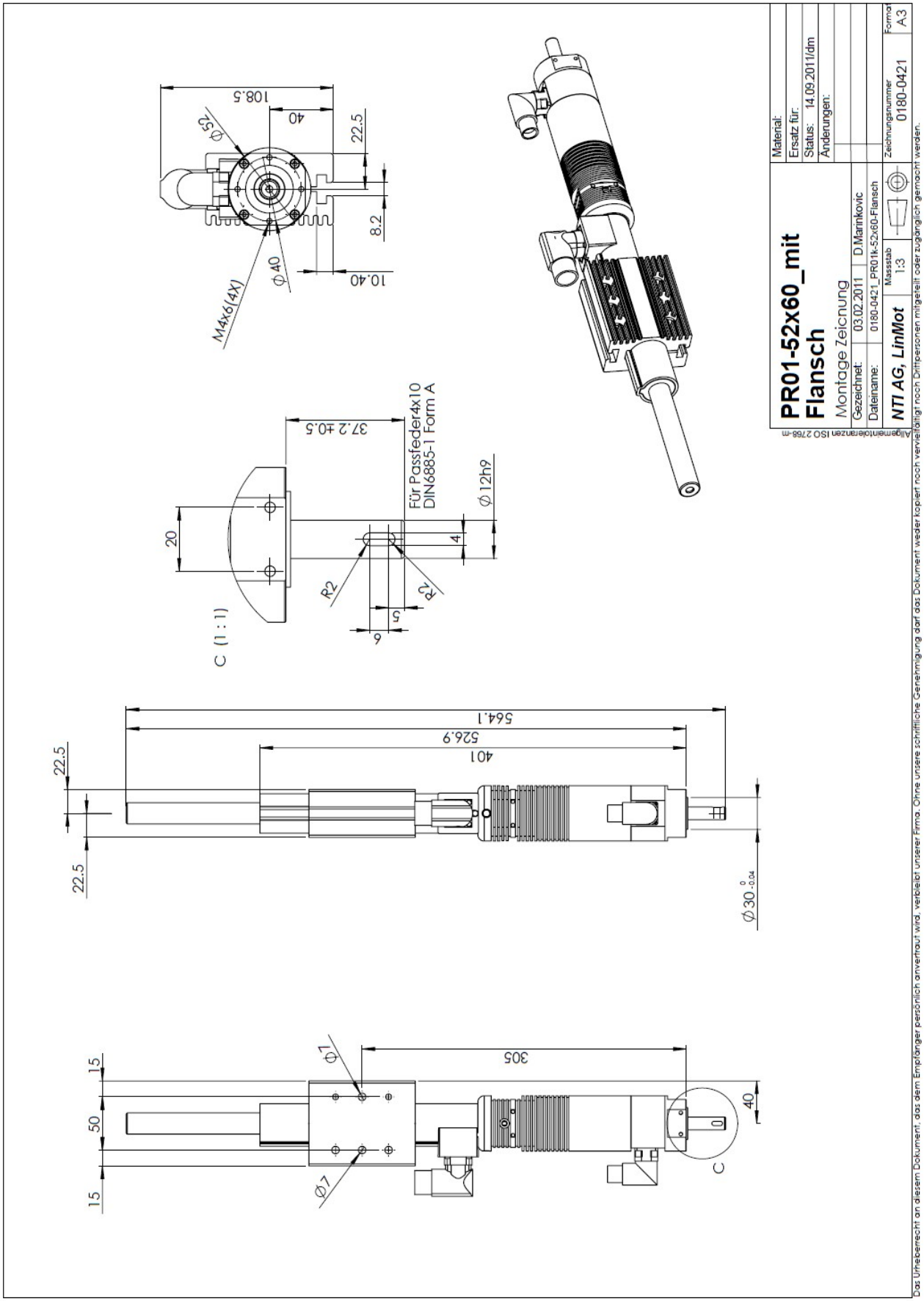

Drawing PR01-52x60-R/37x120F-HP-C-100 with MagSpring

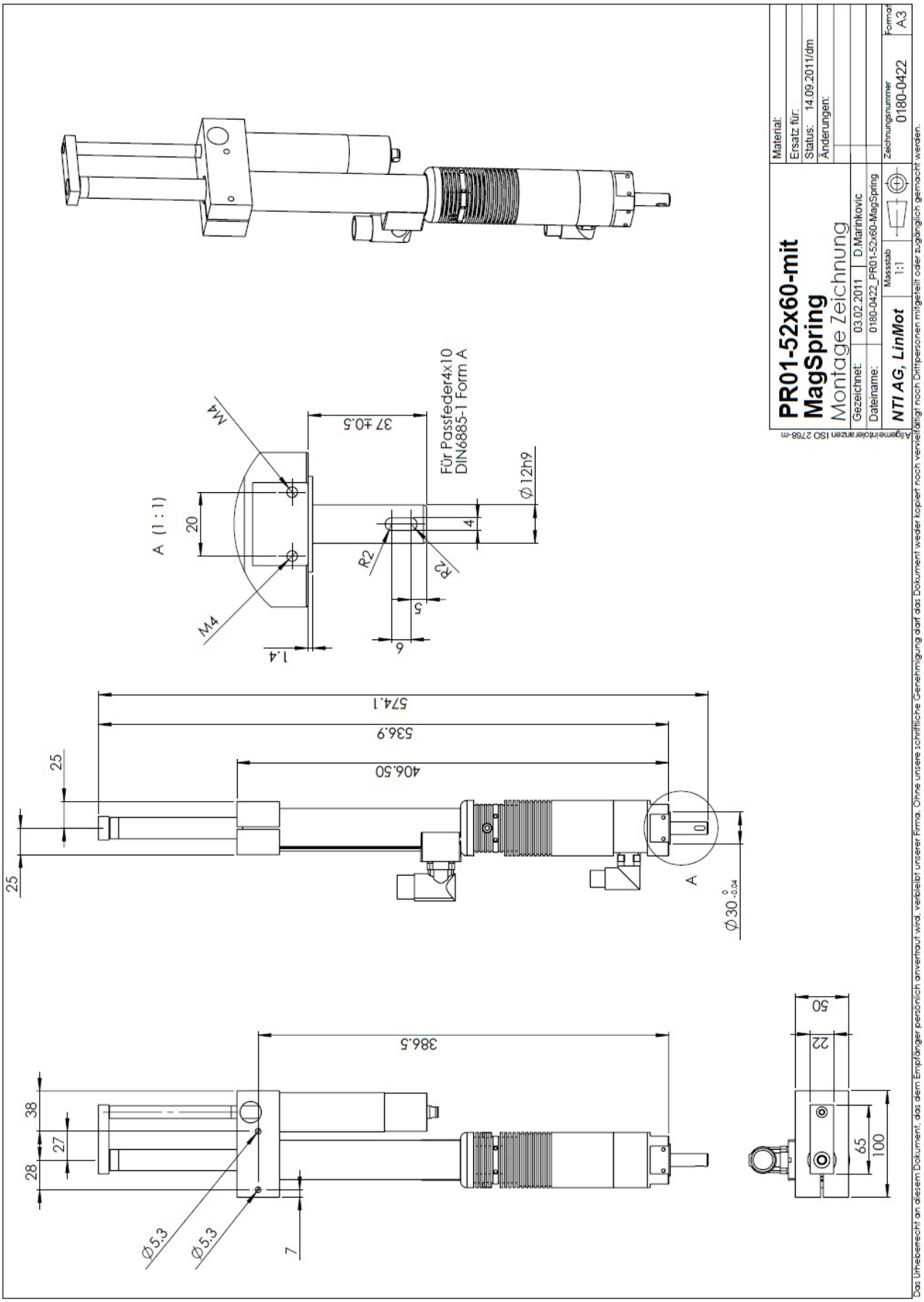

Drawing PR01-52x60-R/37x120F-HP-C-100 Flange/MagSpring/Fan

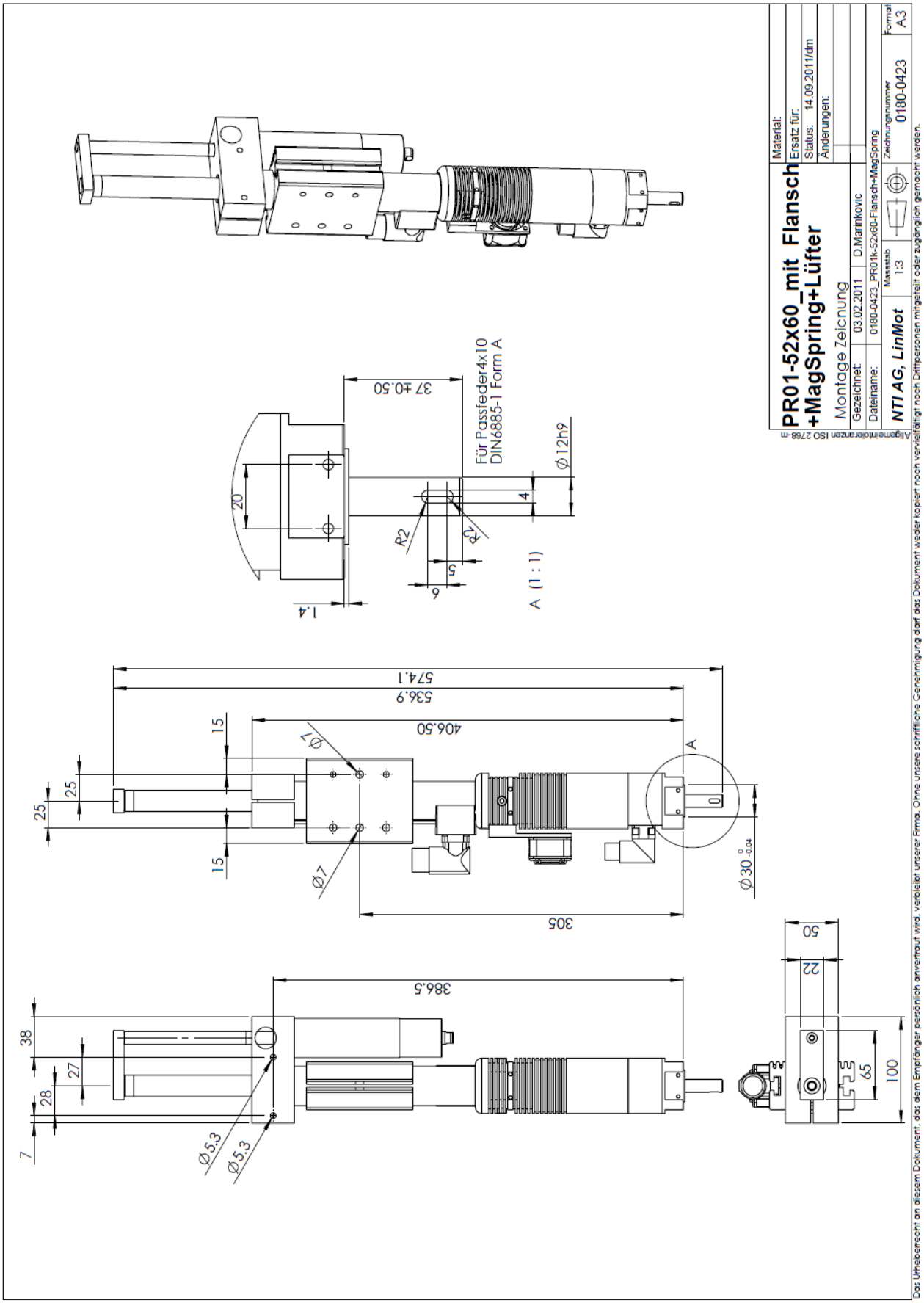

Drawing PR01-52x60-R/37x120F-HP-C-150

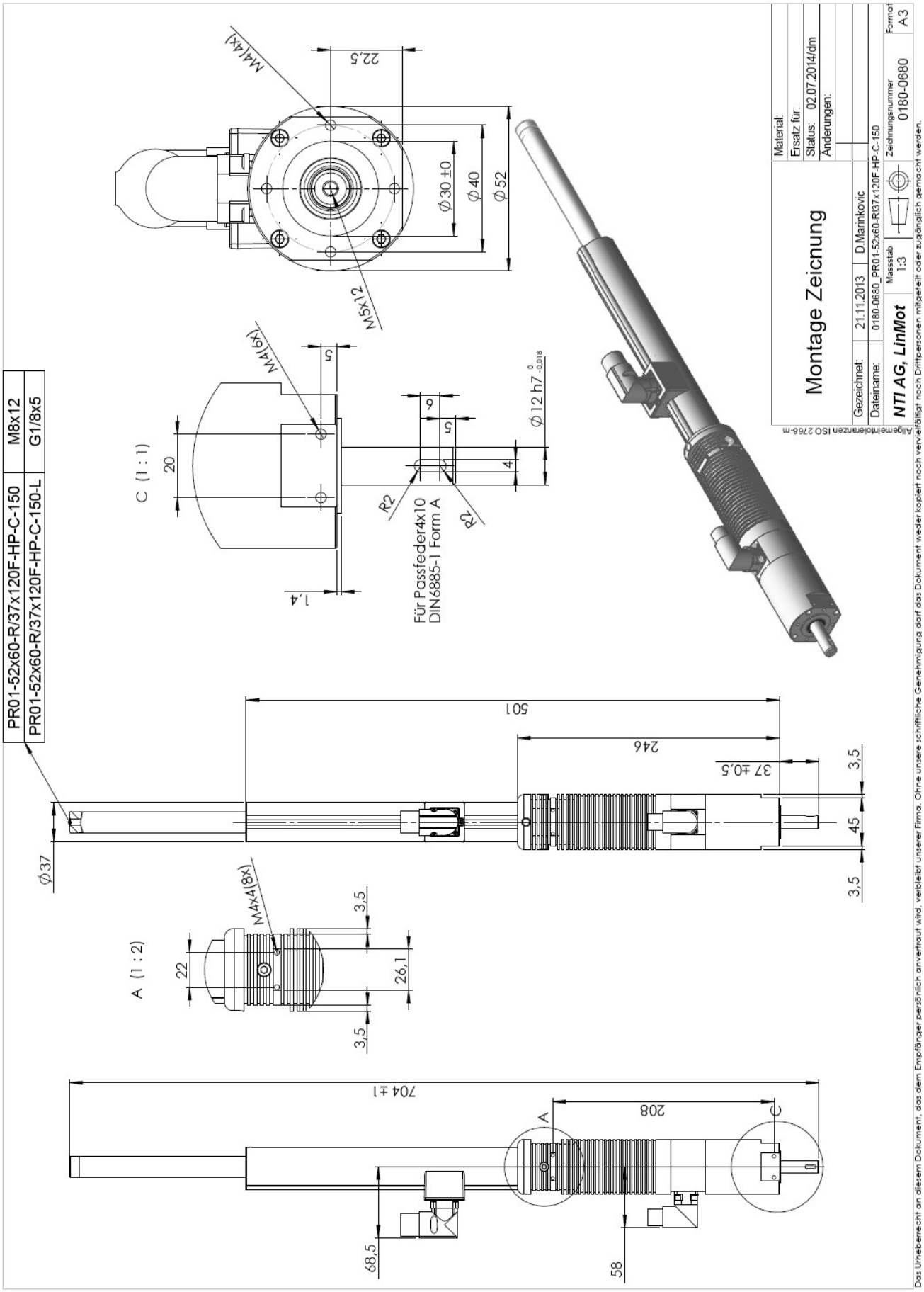

Stroke range PR01-52x60-R/37x120F-HP-C-150

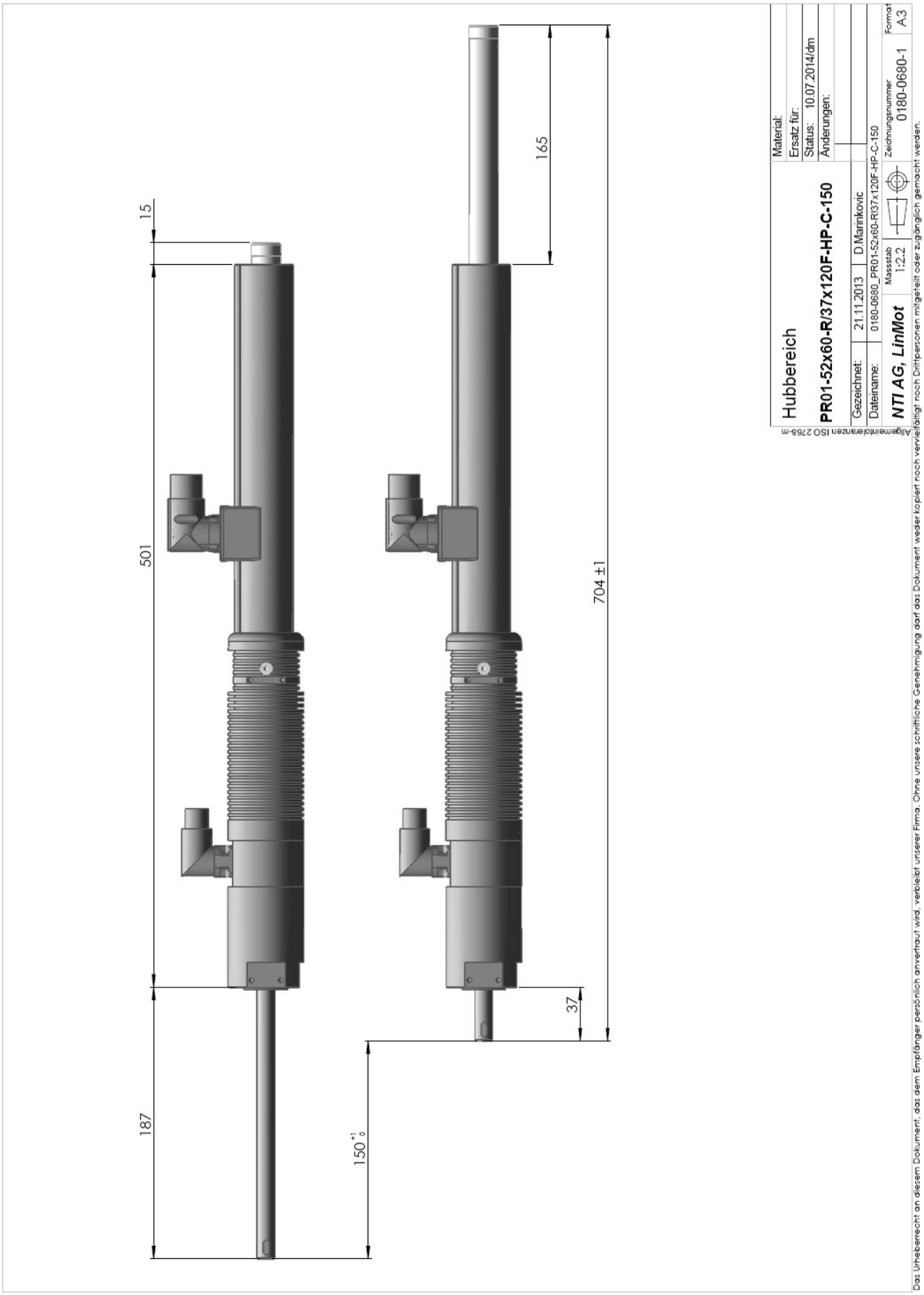

Drawing PR01-52x60-R/37x120F-HP-C-100-G..

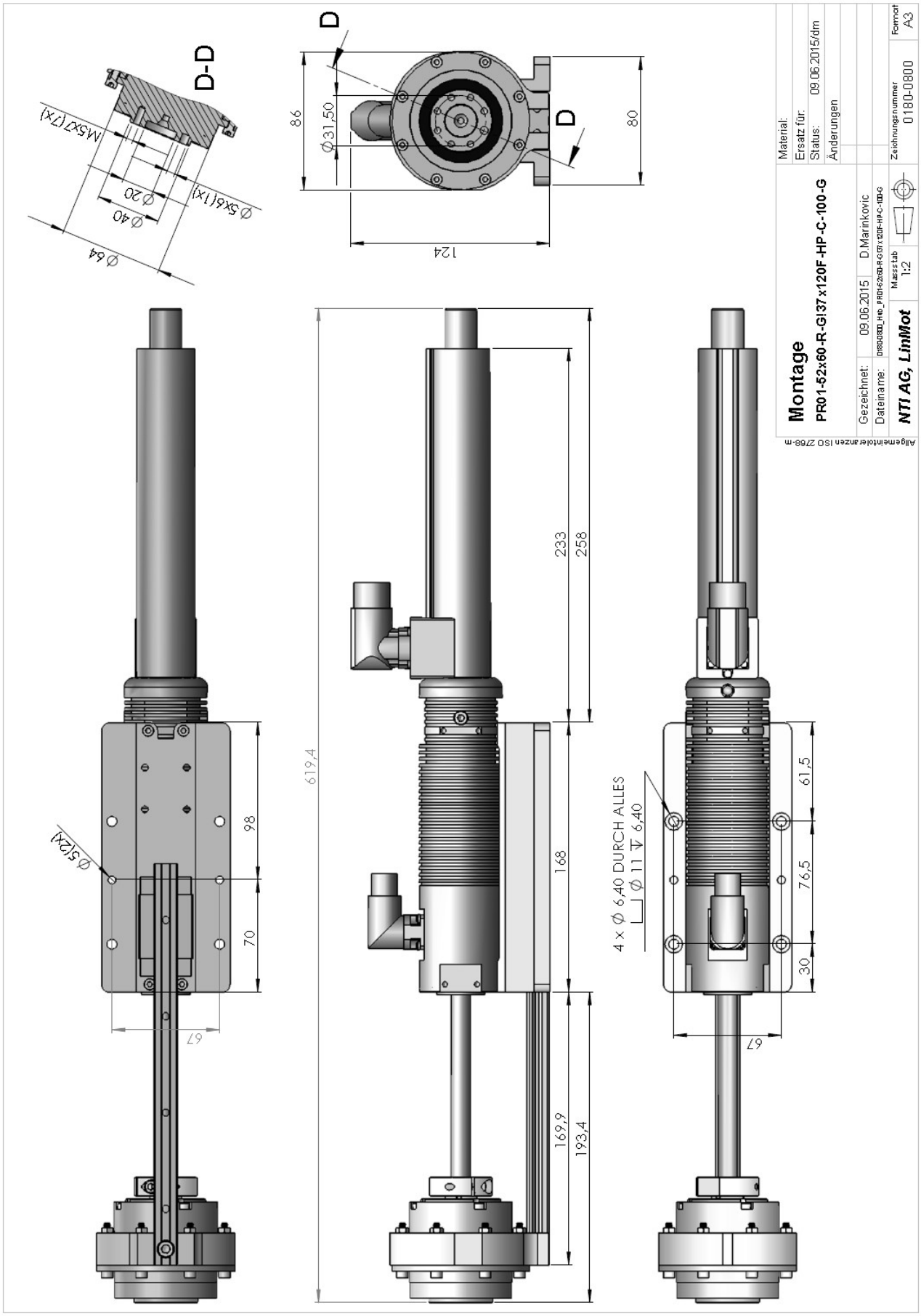

Stroke range PR01-52x60-R/37x120F-HP-C-100-G..

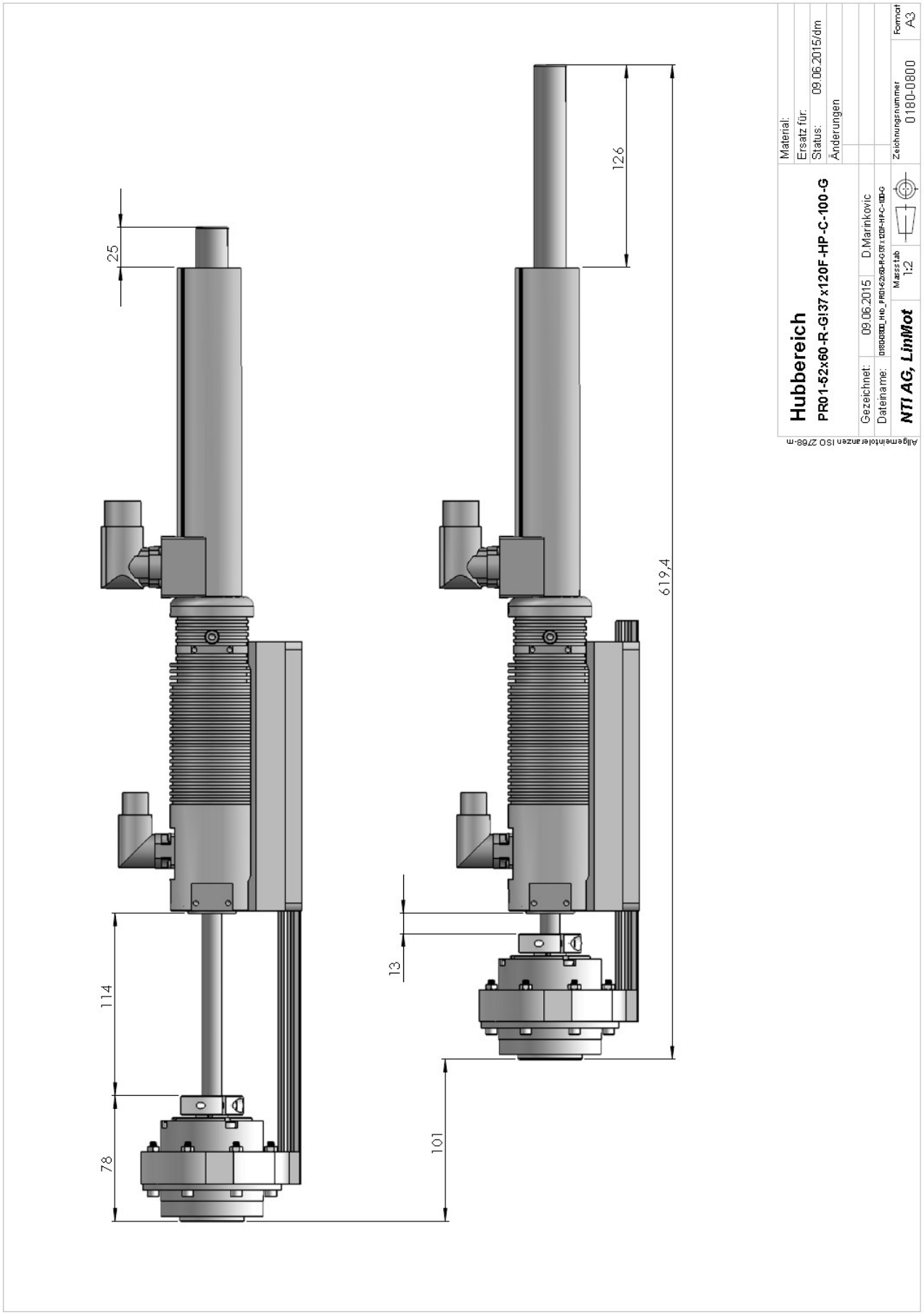

Drawing PR01-84x80-C/48x240F-C-100

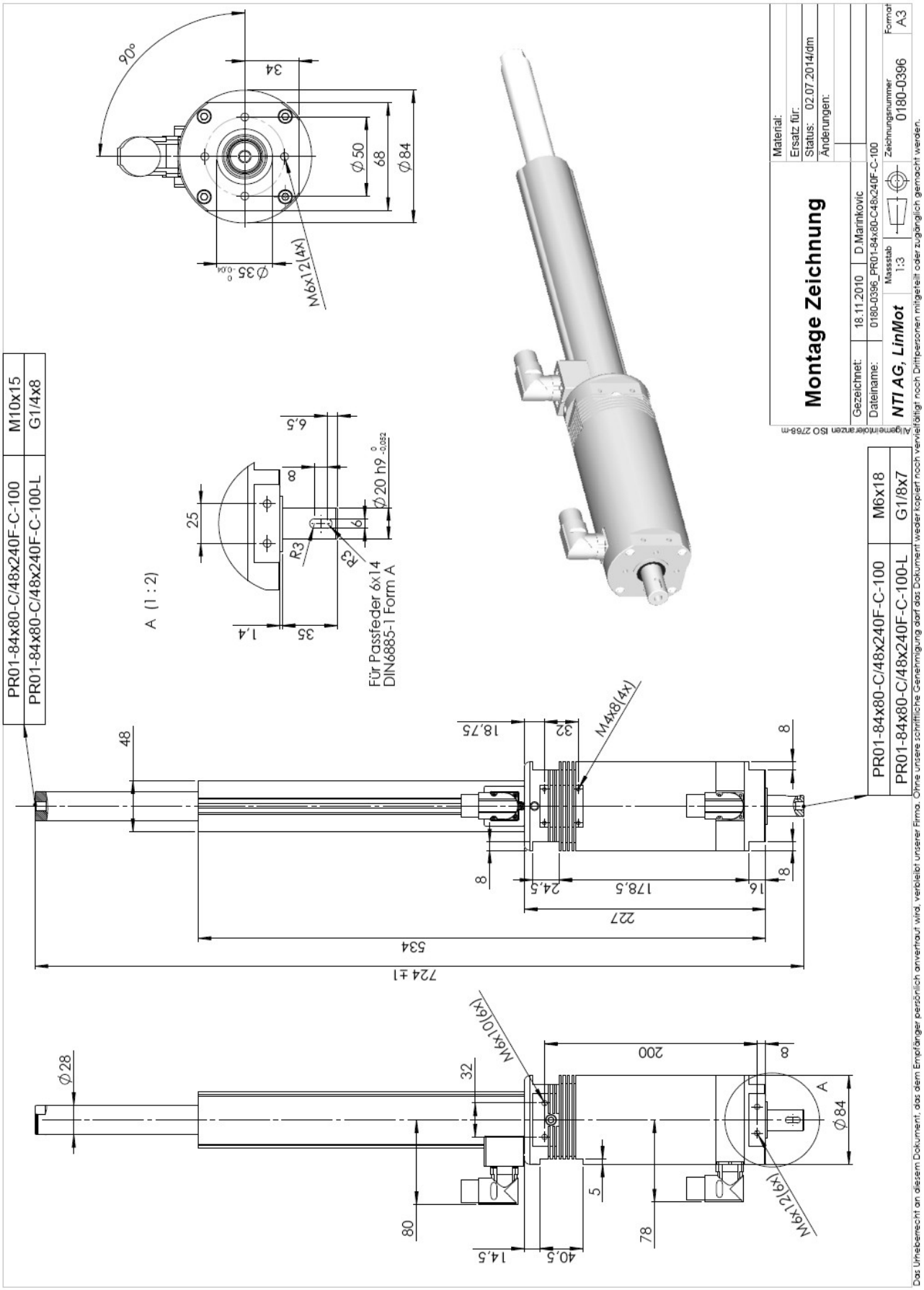

Stroke range PR01-84x80-C/48x240F-C-100

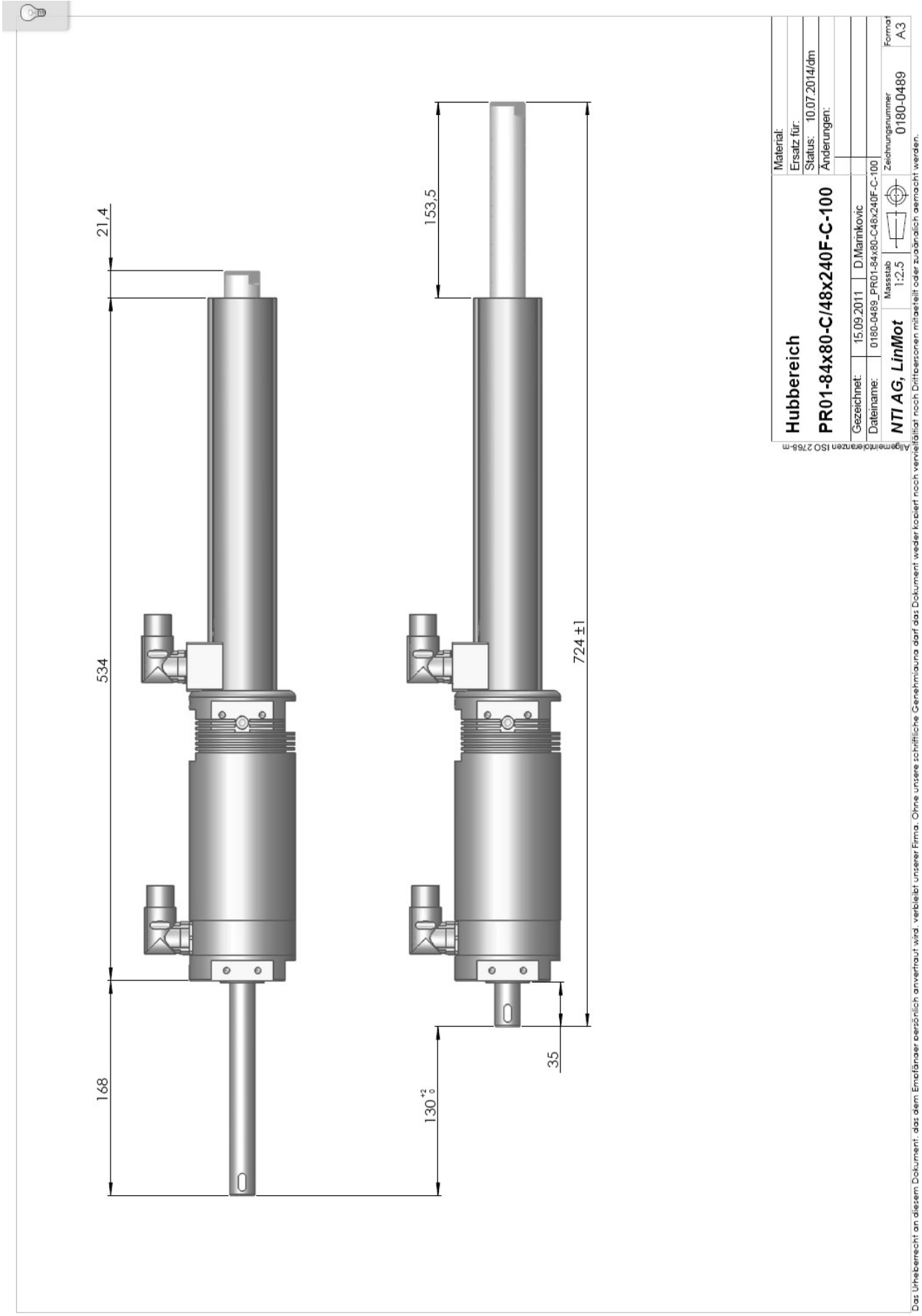

Drawing PR01-84x80-C/48x240F-C-100 with Flange PF01-48x226

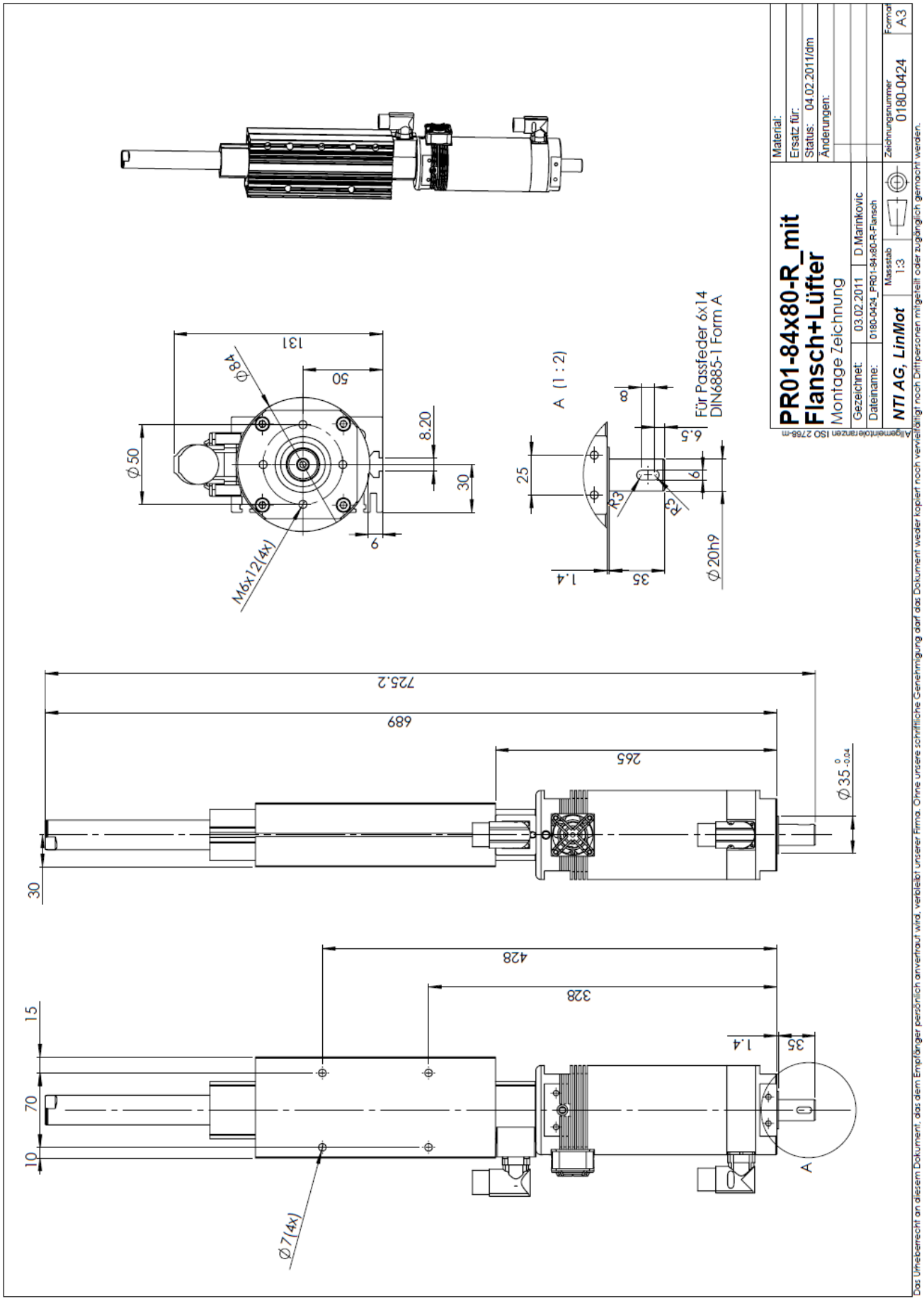

Drawing PR01-84x80-C/48x240F-C-100 Multifunction-Flange and MagSpring

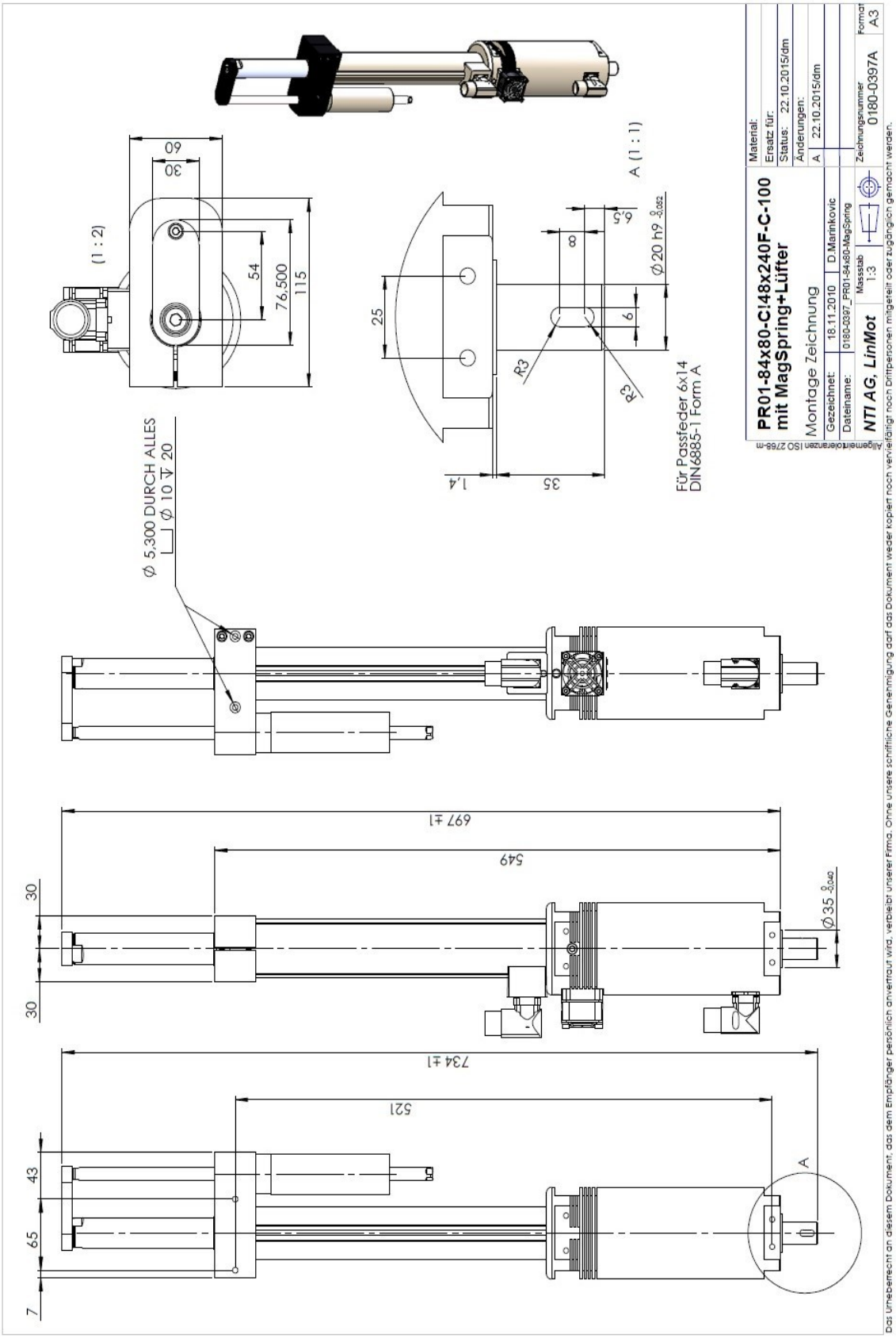

Drawing PR01-84x80-C/48x240F-C-100 with Flange and MagSpring

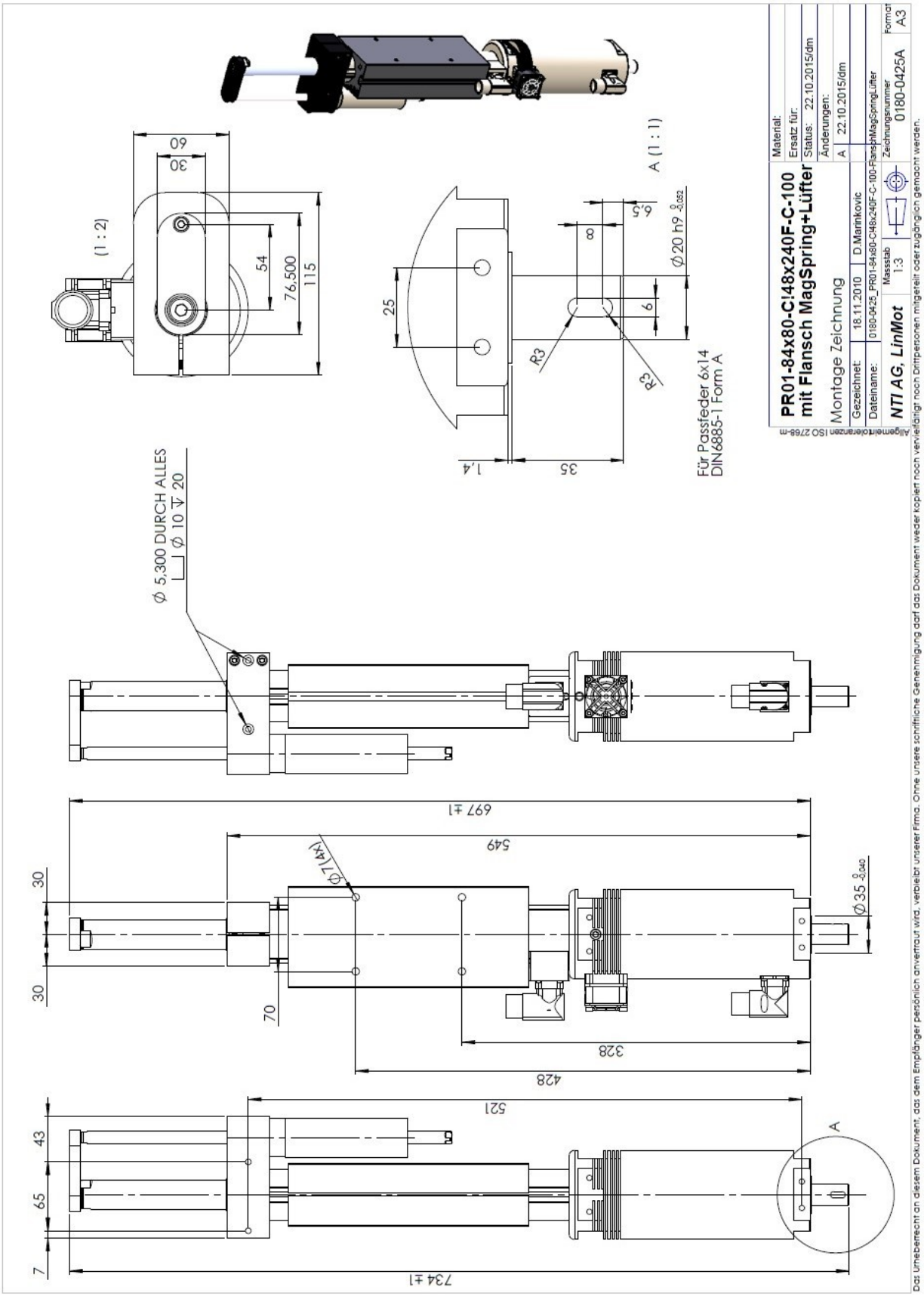

Drawing PR01-84x80-C/48x360F-C-100

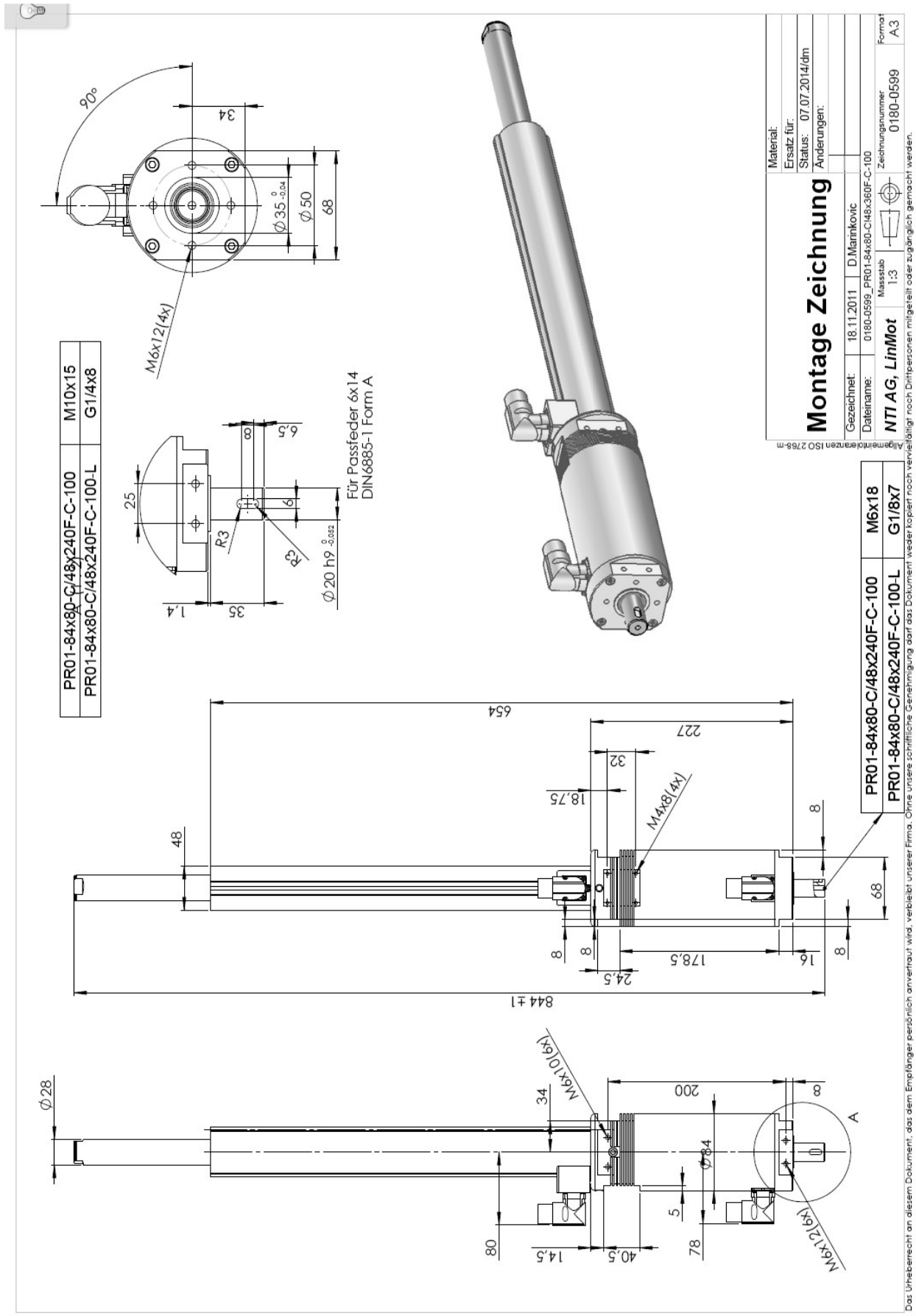

Stroke range PR01-84x80-C/48x360F-C-100

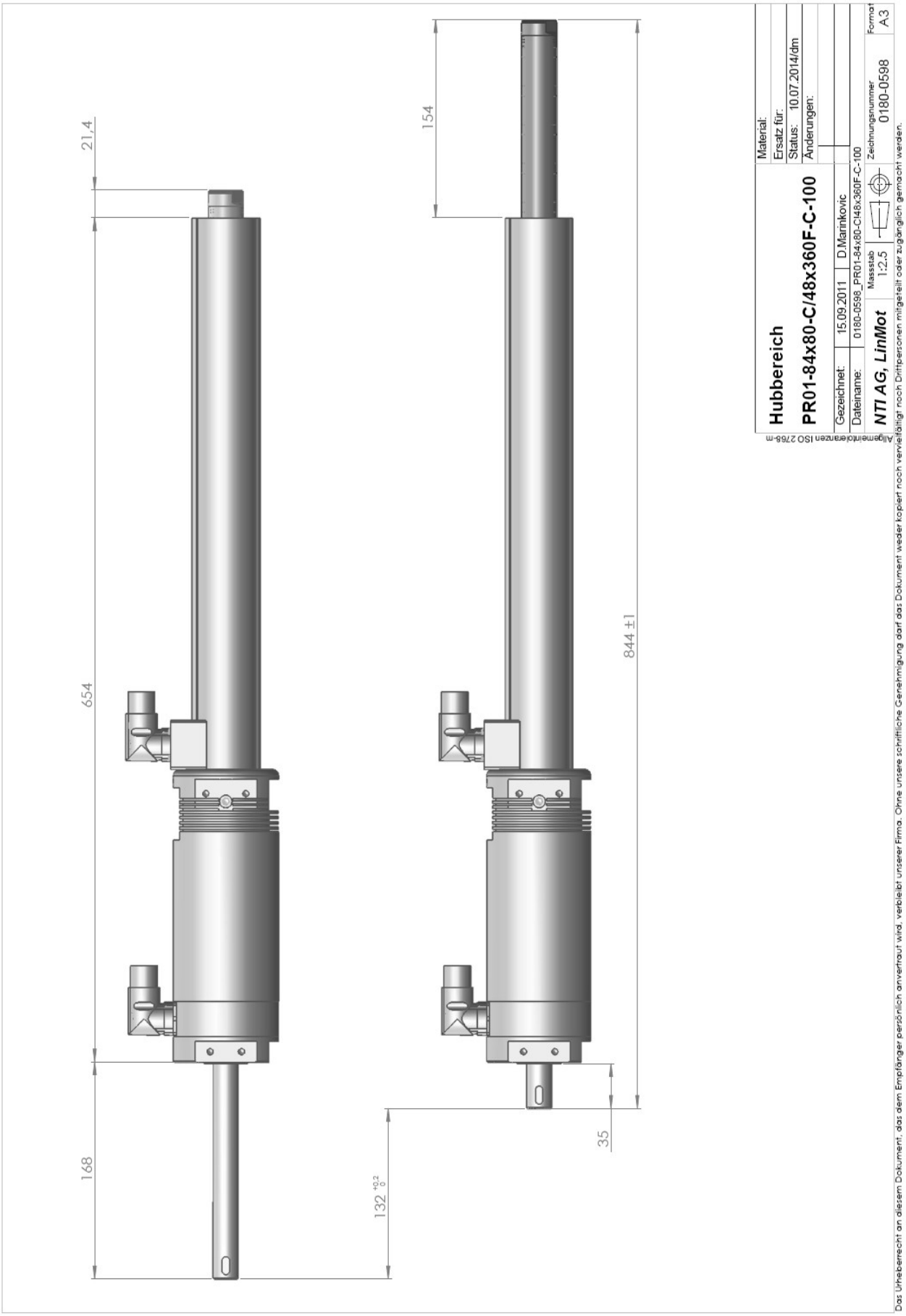

Drawing PR01-84x80-SSC-C/48x240F-C-150

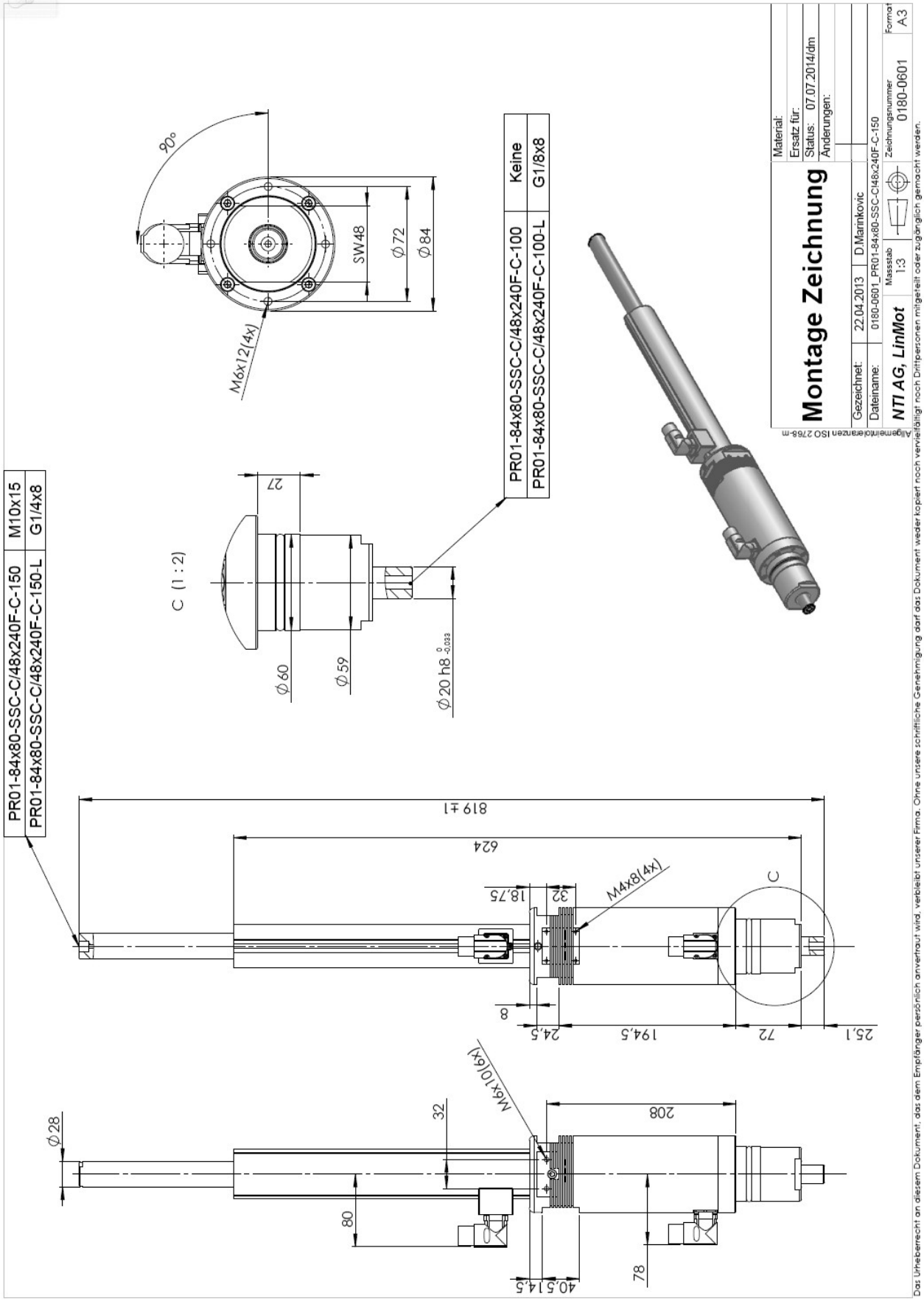

Stroke range PR01-84x80-SSC-C/48x240F-C-150

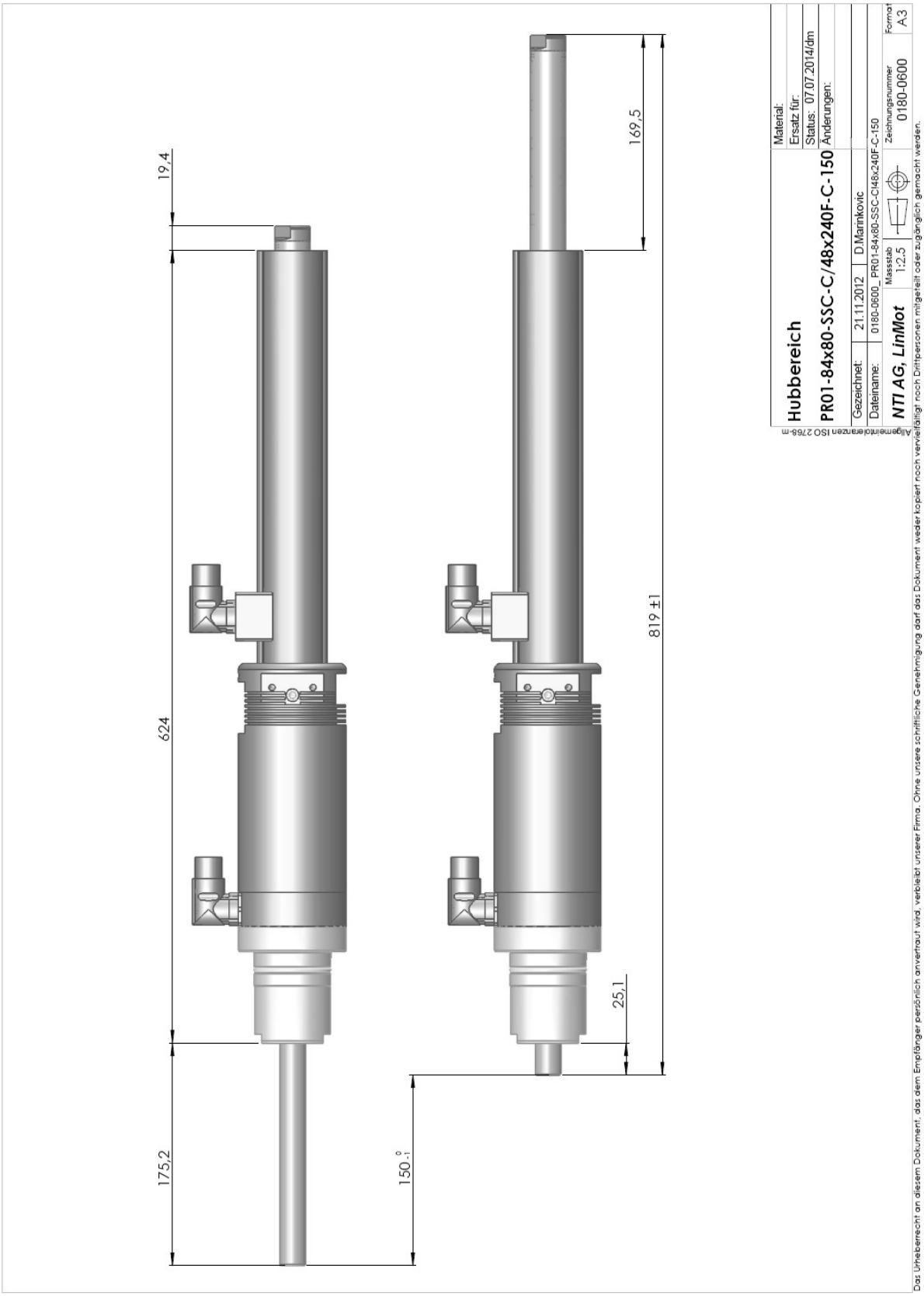

Drawing PR01-84x80-SSC-C/48x360F-C-150

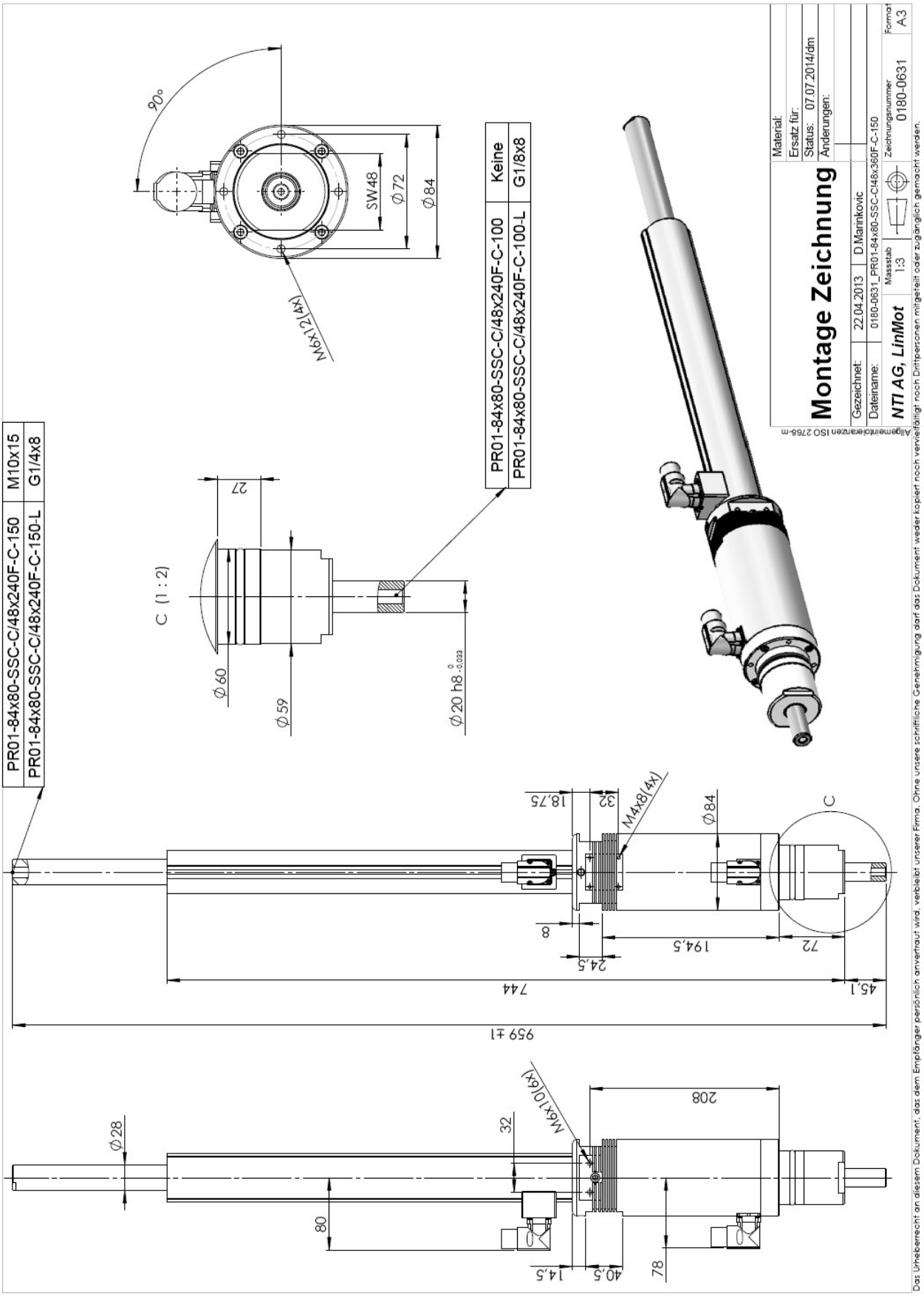

Stroke range PR01-84x80-SSC-C/48x360F-C-150

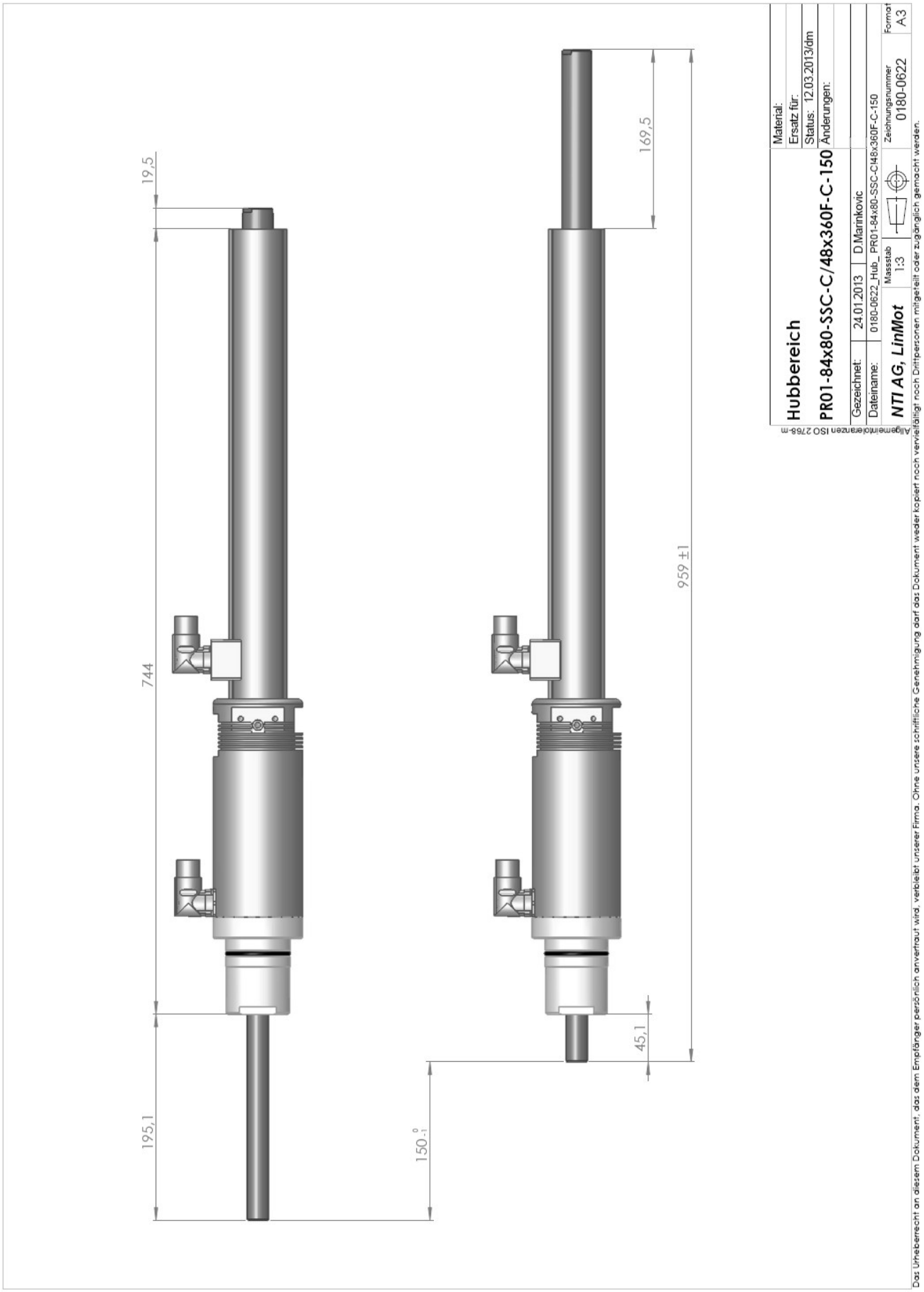

Drawing PR01-84x80-C / RS01-84x80-SSC-C / 48x240F-C-300

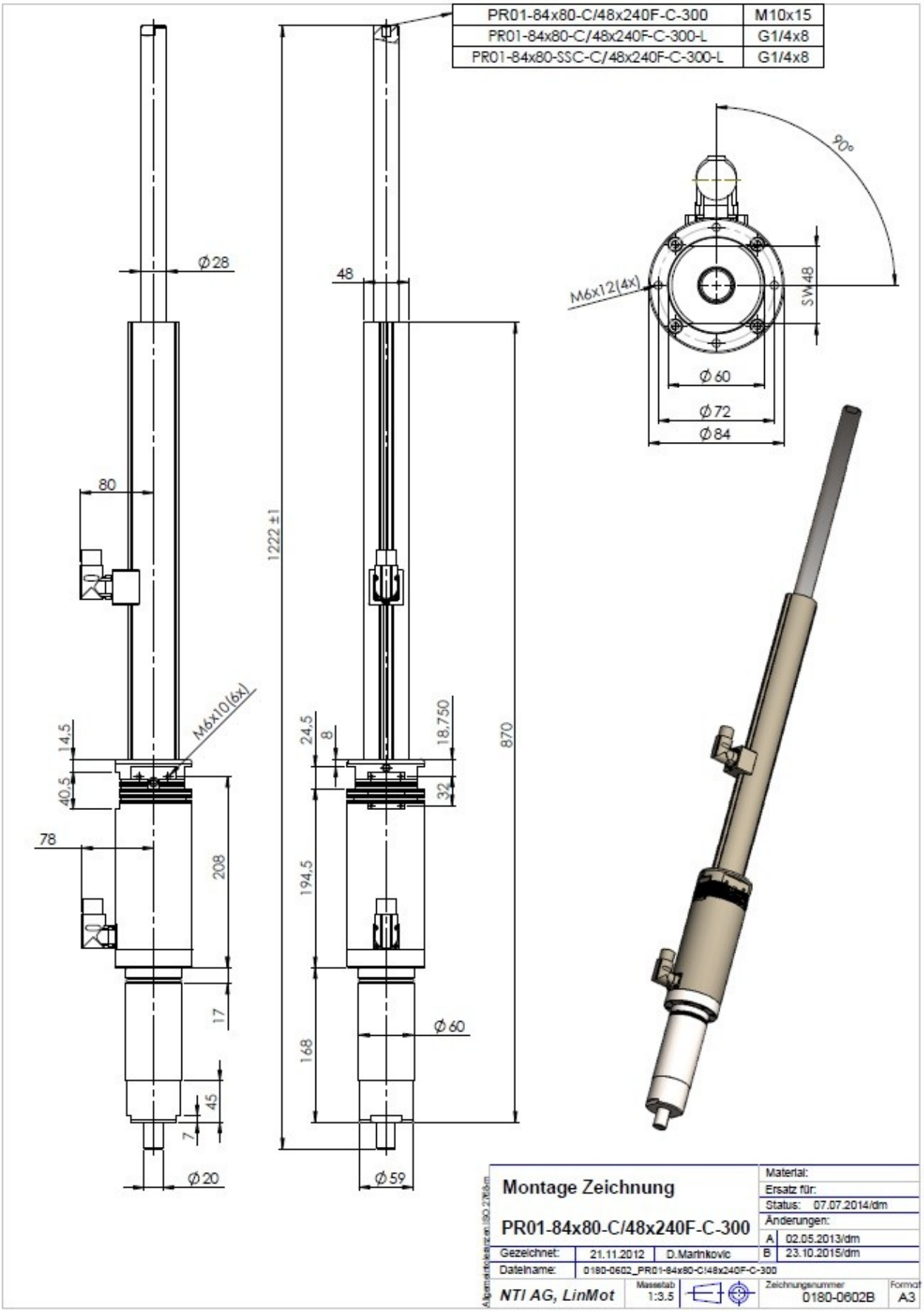

Stroke range PR01-84x80-C / RS01-84x80-SSC-C / 48x240F-C-300

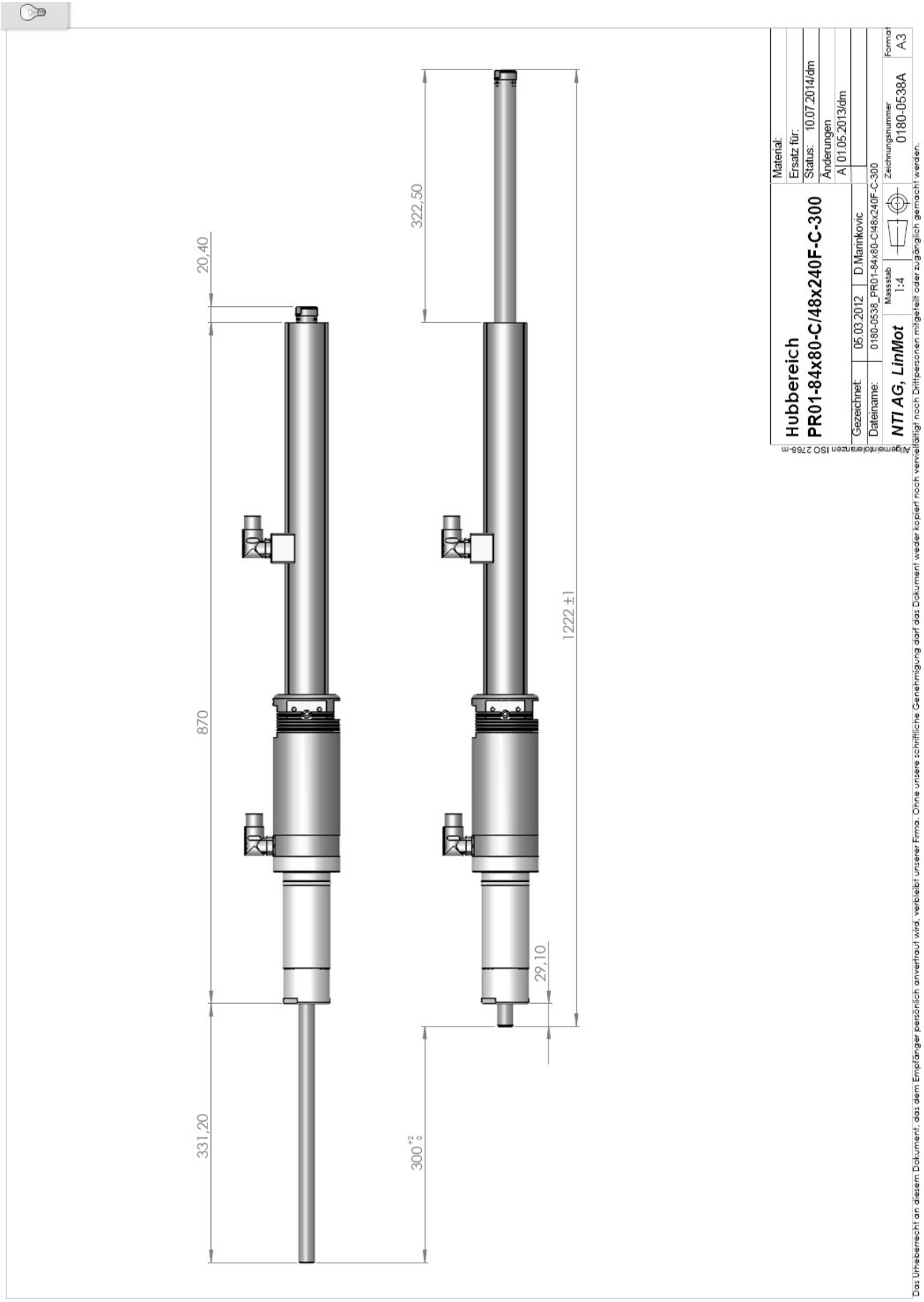

Drawing PR01-84x80-C/48x240F-C-150-G..

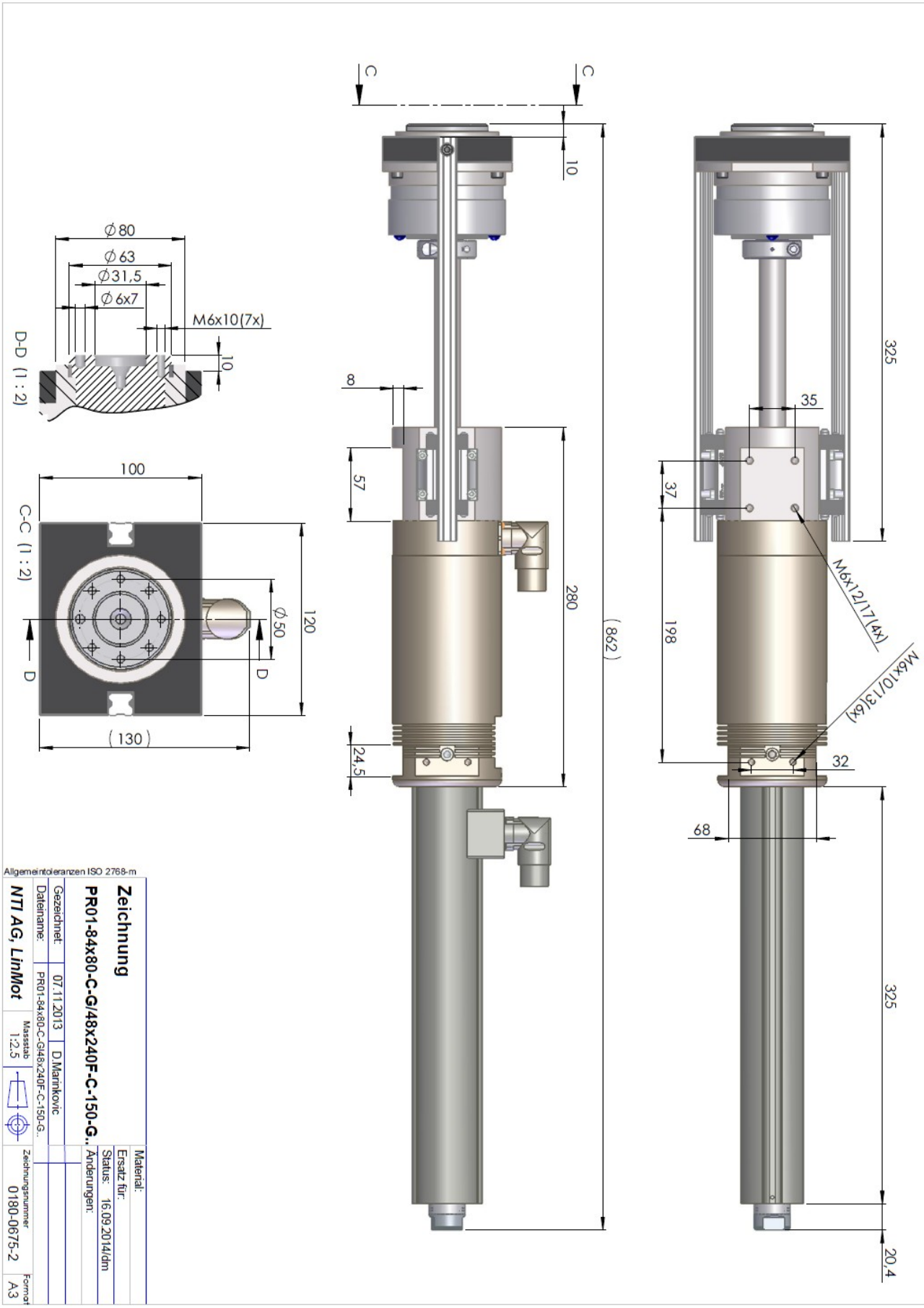

Stroke Range PR01-84x80-C/48x240F-C-150-G..

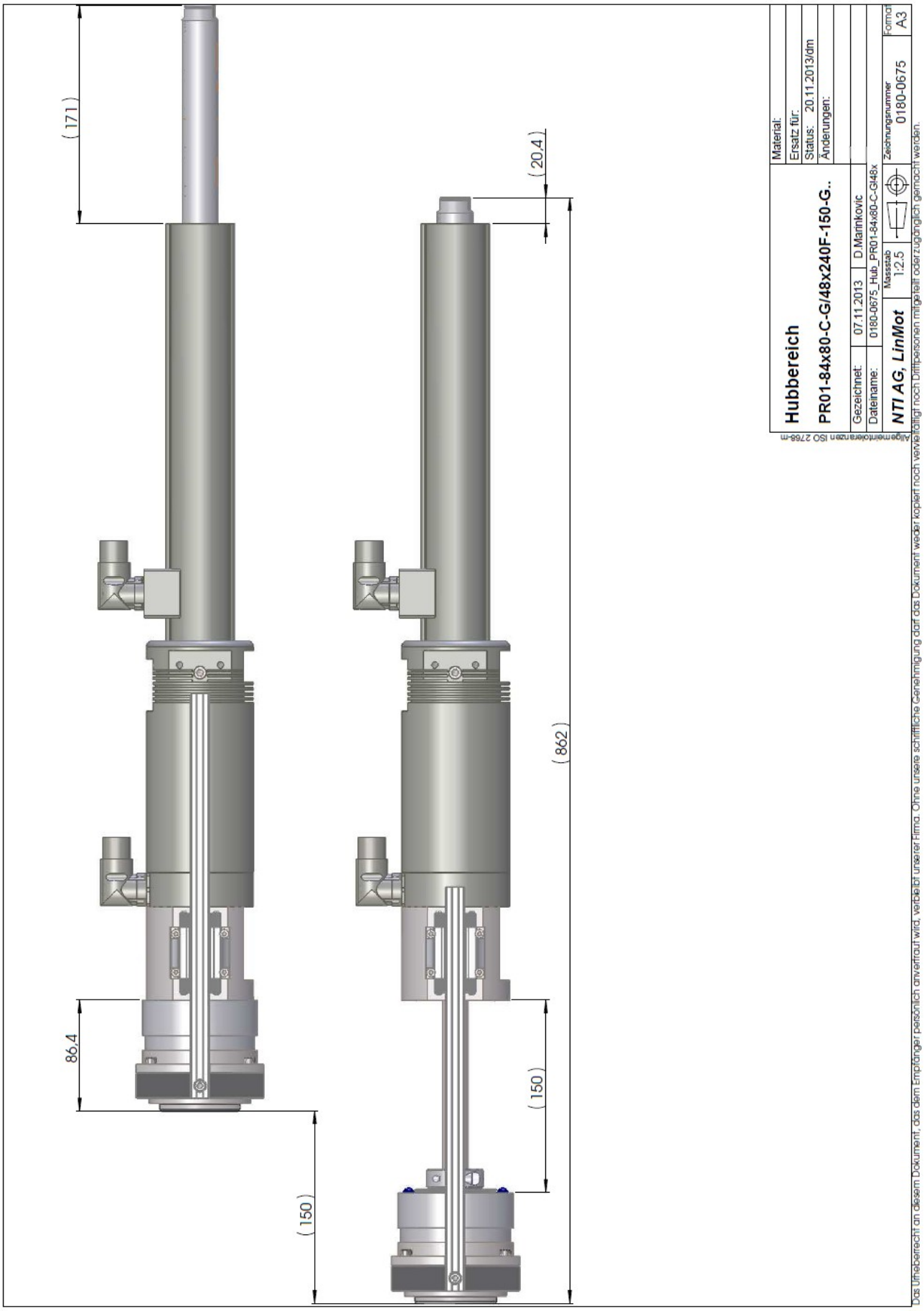

Drawing PR01-84x80-C/48x360F-C-150-G..

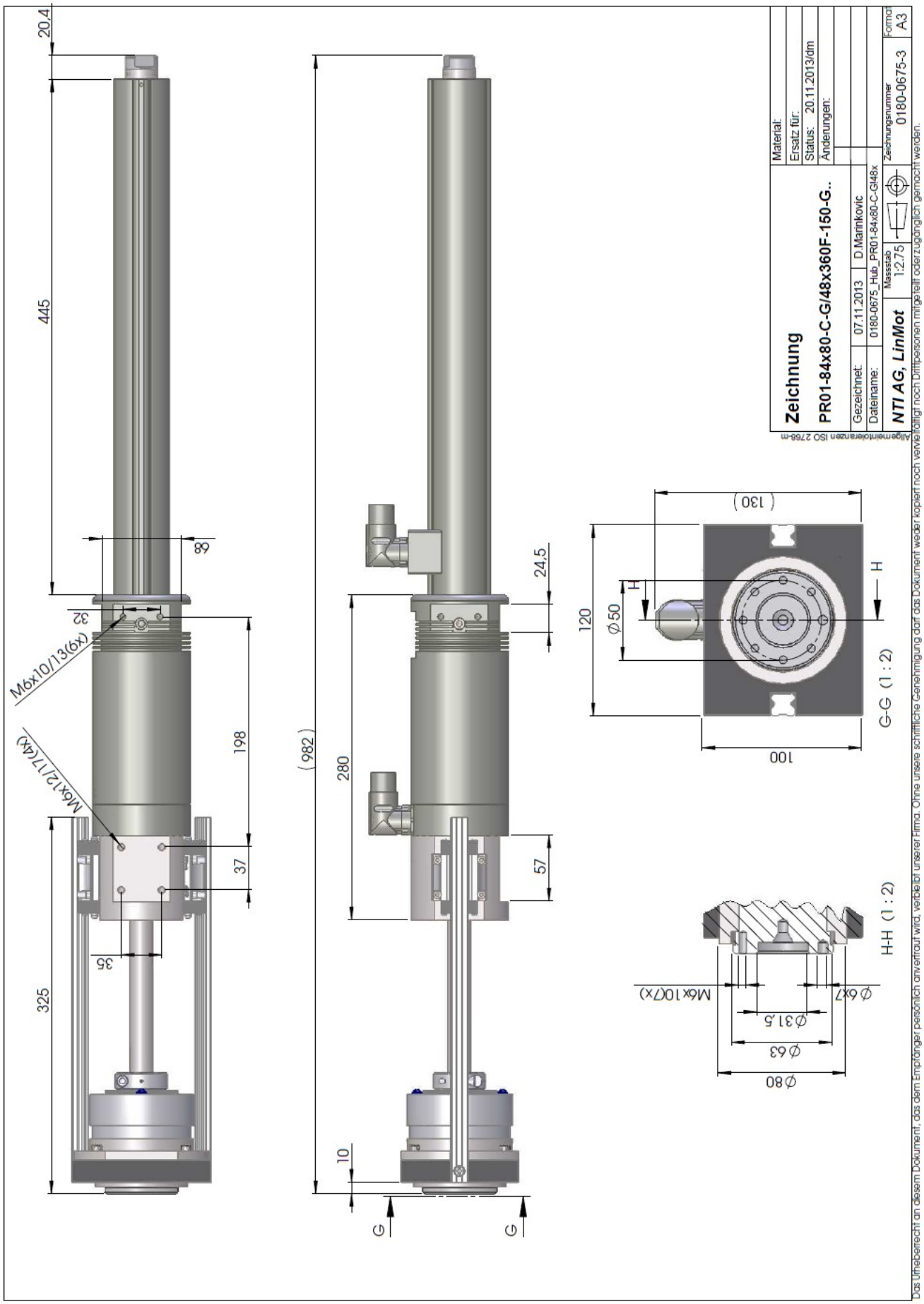

Stroke Range PR01-84x80-C/48x360F-C-150-G..

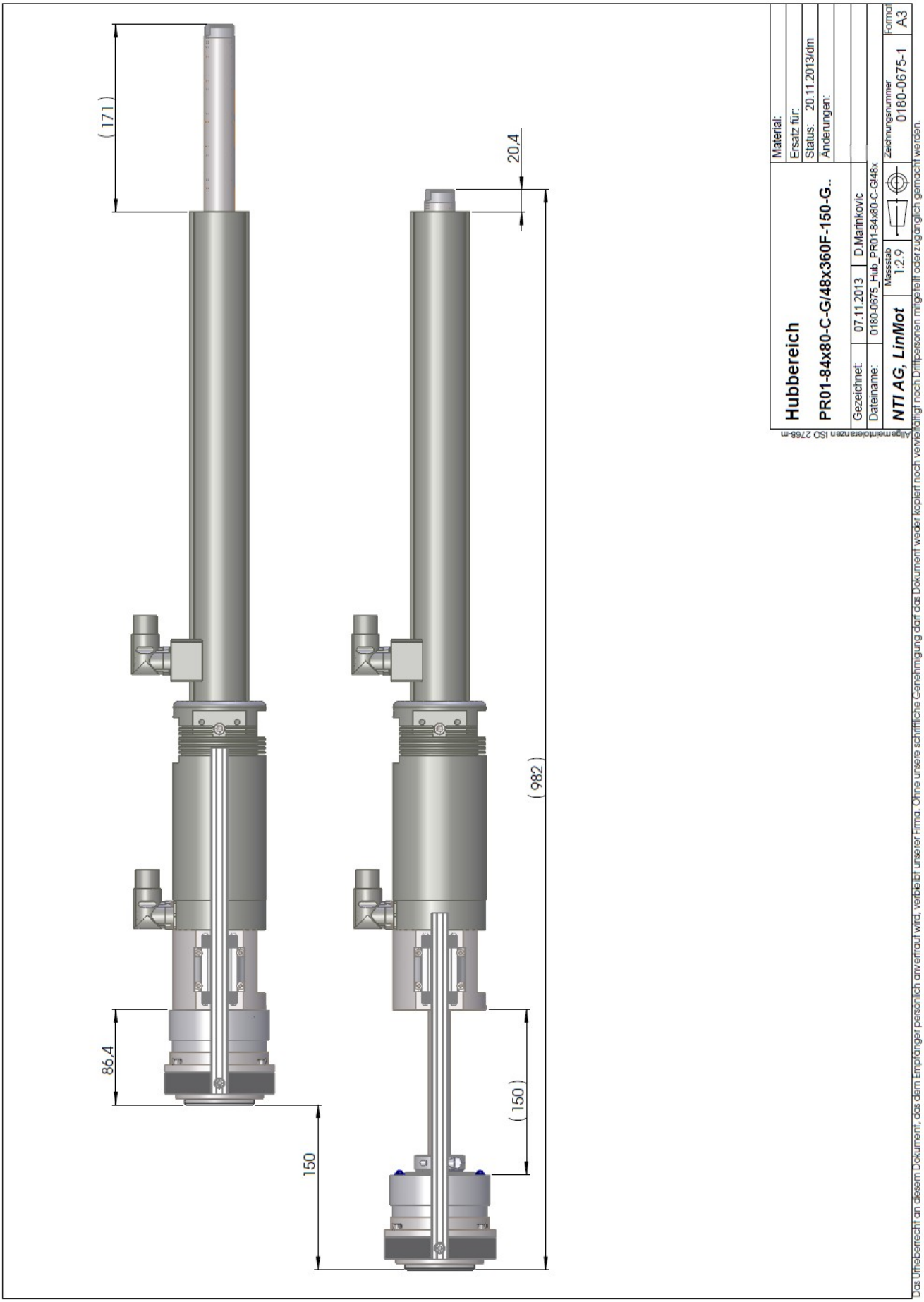

Maintenance of *LinMot*® Linear-Rotary Motors

LinMot Stators will be shipped with an initial lubrication. Maintenance will only be required if the motors run 'dry' or there is a heavy pollution of the motors.
Under normal industrial conditions (5 day, 8h/day) one inspection every 3 months is adequate. Where conditions differ, as with severe and permanent fouling, direct sunshine, operation out in the open, increased operating temperature etc., the maintenance intervals must be shortened till empirical values for the particular application are obtained.

Inspection

Inspections have to be executed according to the operating condition and the load of motors. Following points have to be checked during inspection:

- Is a film of lubricant on the slider?
- Is the wiper (if existent) without visible wear?
- Is the lubricant not adhesive?
- Can the slider be moved easily?

If the motors are heavily polluted respectively if no film of lubricant is on the slider, then stators and sliders must be cleaned and lubricated again.

Cleaning and lubrication

Disassembling and cleaning

If existing, remove wiper (1) from the stator. Open fastening screws (2a, 2b and if existing 2c) between rotary motor and linear motor. Pull the stator (2) rapidly back over the slider (5) to prevent sticking to the Stator (3). Don't attempt to loosen the slider (5) from the rod (6). Attention: huge magnetic attraction of the slider! Clean slider (5), stator (3) and grooves (6) with cleaning agent LU06.

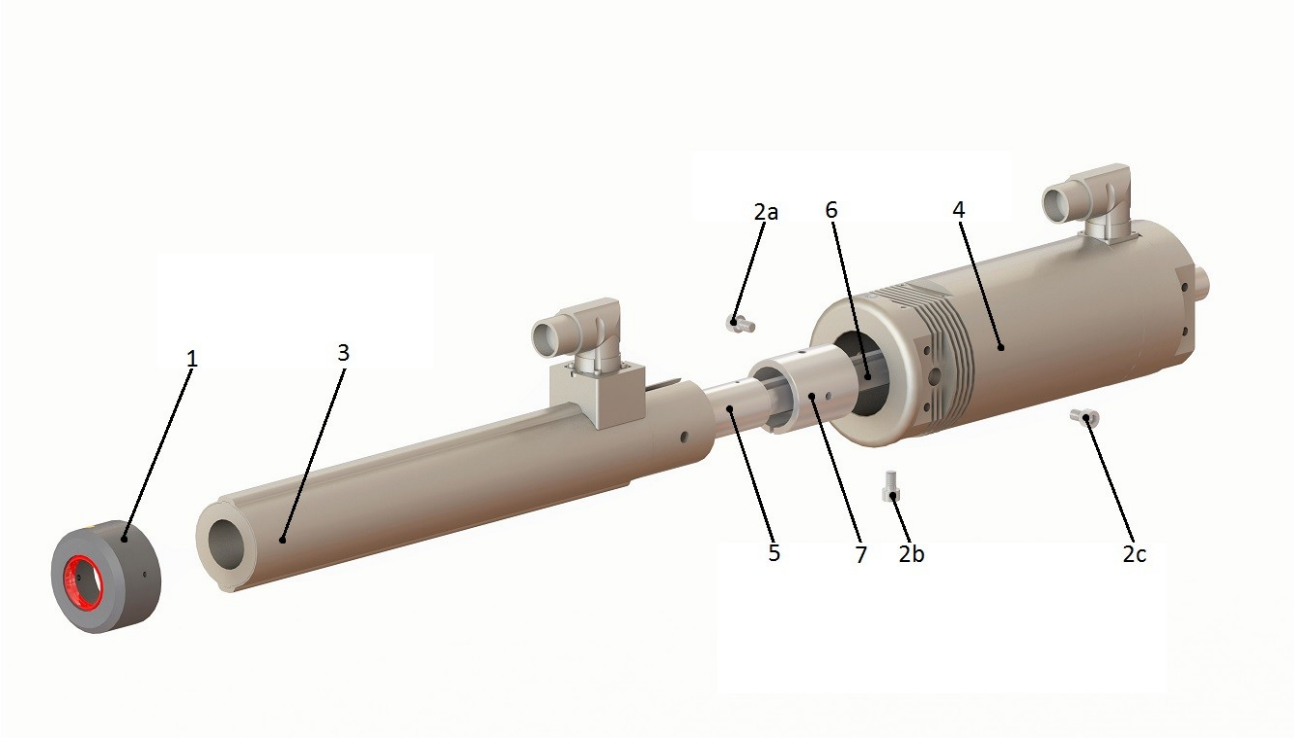

Lubrication and assembling

Lubricate the grooves (6) with 2-3 g (0.1 oz.) LU02. Lubricate the bore of the stators (3) with about 2-3 g (=0.1 oz.) lubricant LU02. There should only be a slight film of lubricant. Do not over lubricate! Lubricate the slider (5) with a soft fabric or manually. 4 g of lubricant per meter slider is enough to create a film of lubricant on the surface of the sliders. (4 g (0.14 oz.) is about ½ of a hazelnut). Do not over lubricate! Especially in higher operating temperatures, over lubrication can lead to a gumming of the lubricant. (In such a situation the motor must be cleaned completely.) If wipers are used then the inner side of the seals of the wipers must be lubricated as well. Do not lubricate outside of the wipers!

Assembling: move the mounting ring (7) adjusted into the stator (3). Make sure that the slider (5) is centered with a cardboard or wood wrapping because of the magnetic attraction to the outside of the stator (3). Then move the stator (3) over the slider (5). Tighten the fastening screws 2a and 2b simultaneously to make sure the slider, stator, and rotary motor are concentric. If existing then tighten screw 2c lightly in the same manner. Use bolt lock (medium).

Lubricant

The lubricant reduces the friction between the chromium-nickel steel surface of the slider and the reinforced plastic plain bearing.

LinMot®* Lubricant LU02 *Art. No. 0150-1953 (8g)

LinMot®* Lubricant LU02 *Art. No. 0150-1954 (50g)

LinMot®*-Lubricant LU02 *Art. No. 0150-1955 (1000g)

LinMot® LU02 Lubricant corresponds to KLÜBERSYNTH UH1 14-31 which was developed for the food processing industry.

Cleaning Agent

The following Cleaning Agent spray is recommended for LinMot Stators and Sliders:

LinMot®* Spray LU06-250 *(250ml)* *Art. No. 0150-2394

LinMot® LU06 Lubricant corresponds to KLÜBERSYNTH NH1 4—2 which was developed for the food processing industry.

Storage / transport

·Sliders are to be stored and transported only in the plastic containers (with cardboard inlay) provided for this, or already fitted in *LinMot® motors* and secured.

·Maximum storage temperature: 70 °C

Trouble Shooting

Trouble Shooting of Linear Motors

The following tables show the resistive value between the different connector pins for each stator type. If the value is not in a range of +/- 10% the stator may be damaged (temperature of the stator for all measurements: 20°C).

PS01–37x120F-HP-C-80 /-100 / -150

Phase1+ / Phase1-		Pin A / Pin B	2.6Ω
Phase2+ / Phase2-		Pin C / Pin D	2.6 Ω
5V / GND		Pin E / Pin F	155 Ω
Sensor Sinus / GND		Pin G / Pin F	33 kΩ
Sensor Cosine / GND		Pin H / Pin F	33 kΩ
Temp. Sensor / GND		Pin L / Pin F	10kΩ
Phase / GND		Pin A,B,C,D / Pin F	>20 MΩ
All Pin / Shield		Pin A-L / Housing	>20 MΩ

PS01–48x240F-C-100 (-150, -300)

Phase1+ / Phase1-		Pin A / Pin B	1.1 Ω
Phase2+ / Phase2-		Pin C / Pin D	1.1 Ω
5V / GND		Pin E / Pin F	155 Ω
Sensor Sin / GND		Pin G / Pin F	33 kΩ
Sensor Cos / GND		Pin H / Pin F	33 kΩ
Temp. Sensor / GND		Pin L / Pin F	10 kΩ
Phase / GND		Pin A,B,C,D / Pin F	>20 MΩ
Alle Pins / Shield		Pin A-L / Gehäuse	>20 MΩ

PS01–48x360F-C-100 (-150)

Phase1+ / Phase1-		Pin A / Pin B	1.5 Ω
Phase2+ / Phase2-		Pin C / Pin D	1.5 Ω
5V / GND		Pin E / Pin F	155 Ω
Sensor Sin / GND		Pin G / Pin F	33 kΩ
Sensor Cos / GND		Pin H / Pin F	33 kΩ
Temp. Sensor / GND		Pin L / Pin F	10 kΩ
Phase / GND		Pin A,B,C,D / Pin F	>20 MΩ
Alle Pins / Shield		Pin A-L / Gehäuse	>20 MΩ

Trouble Shooting of Rotary Motors

The following tables show the resistive value between the different connector pins for each stator type. If the value is not in a range of +/- 10% the stator may be damaged (temperature of the stator for all measurements: 20°C).

RS01-52x40-R

Phase A / Phase B		Pin 1 / Pin 2	7.1Ω
Phase A / Phase C		Pin 3 / Pin 4	7.1 Ω
5V / GND		Pin A / Pin B	155 Ω
Sensor Sinus / GND		Pin C / Pin B	33 kΩ
Sensor Cosine / GND		Pin D / Pin B	33 kΩ
Temp. Sensor / GND		Pin E / Pin B	10kΩ
Phase / GND		Pin 1,2,3,4 / Pin B	>20 MΩ
All Pin / Shield		Pin 1-E / Housing	>20 MΩ

RS01-52x60-R /-150 / -180

Phase A / Phase B		Pin 1 / Pin 2	3Ω
Phase A / Phase C		Pin 3 / Pin 4	3 Ω
5V / GND		Pin A / Pin B	155 Ω
Sensor Sinus / GND		Pin C / Pin B	33 kΩ
Sensor Cosine / GND		Pin D / Pin B	33 kΩ
Temp. Sensor / GND		Pin E / Pin B	10kΩ
Phase / GND		Pin 1,2,3,4 / Pin B	>20 MΩ
All Pin / Shield		Pin 1-E / Housing	>20 MΩ

RS01-52x60-R (Delivery until June 2011)

Phase A / Phase B		Pin 1 / Pin 2	11.9Ω
Phase A / Phase C		Pin 3 / Pin 4	11.9 Ω
5V / GND		Pin A / Pin B	155 Ω
Sensor Sinus / GND		Pin C / Pin B	33 kΩ
Sensor Cosine / GND		Pin D / Pin B	33 kΩ
Temp. Sensor / GND		Pin E / Pin B	10kΩ
Phase / GND		Pin 1,2,3,4 / Pin B	>20 MΩ
All Pin / Shield		Pin 1-E / Housing	>20 MΩ

RS01-84x80-C / RS01-84x80-SSC-C / RS01-84x80-C-300

Phase A / Phase B		Pin A / Pin B	1.1Ω
Phase A / Phase C		Pin C / Pin D	1.1 Ω
5V / GND		Pin E / Pin F	155 Ω
Sensor Sinus / GND		Pin G / Pin F	33 kΩ
Sensor Cosine / GND		Pin H / Pin F	33 kΩ
Temp. Sensor / GND		Pin L / Pin F	10kΩ
Phase / GND		Pin A,B,C,D / Pin F	>20 MΩ
All Pin / Shield		Pin A-L / Housing	>20 MΩ

Caution: Handling Instructions for Sliders

LinMot Slider

LinMot® Linear Motor sliders must be handled with care especially if not assembled within the stator! Damaging or warping of the slider can result in shortened life and/or failure of the motor. The slider is essentially a high-precision machine component consisting of neodymium magnets and plastic materials assembled in a thin steel tube. Do not use sliders who are already damaged on the surface (scratches, deformation, etc.). This can provide a further damage of the stator! Keep slider away from unshielded flame or heat. Temperature of more than 120°C will cause demagnetization.

Magnetism

LinMot® sliders contain neodymium magnets which may disturb or damage magnetic data carriers and delicate electronic equipment merely by coming close to them. Examples for such equipment are: television and computer monitors, credit cards and EC-cards, computers, floppy discs and other data storage medium, video tapes, mechanical watches, hearing devices and loudspeaker. Heart pacemakers can be disturbed by strong magnets. Keep a minimum distance of 1m.

Crushes

When handling sliders be aware that, due the strong magnetic attraction, serious injury from fingers being pinched between the slider and nearby steel parts is a very real possibility if caution is not exercised.

No modification of sliders provided by customers is allowed!

Do not modify the slider in any way. Any modification could destroy the included magnets and magnet dust can be build. Magnet dust is easily inflammable! NdFeB-Magnets are not made of steel. These magnets are sintered and due to that highly breakable.

Declaration of Conformity CE-Marking

We **NTI AG**
LinMot **®**
Bodenaeckerstrasse 2
CH-8957, Spreitenbach

declare under our sole responsibility, that the products

Product	Part.-No.	Product	Part.-No.
RS01-52x40-R	0150-1572	PS01-37x120F-HP-C-80	0150-2256
RS01-52x60-R	0150-1563	PS01-37x120F-HP-C-100	0150-1545
RS01-52x60-R-195	0150-1570	PS01-37x120F-HP-C-150	0150-2994
RS01-84x80-R/-C	0150-1562	PS01-37x120F-HP-C-180	0150-2192
RS01-84x80-SSC-C	0150-2508	PS01-48x240F-C-100	0150-1547
RS01-84x80-C-300	0150-2509	PS01-48x360F-C-100	0150-1566
RS01-84x80-C-G	0150-2528	PS01-48x240F-C-150	0150-1577
		PS01-48x360F-C-150	0150-1584
		PS01-48x240F-C-300	0150-1578

Is conform to the provisions of directives

2014/30/EU (EMCD)

based on the following standards

EN61800-3

Spreitenbach, 19. 4. 2016

Dr.-Ing. Ronald Rohner
CEO NTI AG

Contact address:

NTI AG
LinMot
Bodenaeckerstrasse 2
CH-8957 Spreitenbach

Tel. +41 (0)56 419 9191
Fax. +41 (0)56 419 9192
email: office@LinMot.com
Web: www.LinMot.com

LinMot Inc.
204 E Morrissey Dr.
Elkhorn
WI 53121
USA

Phone: 262-743-2555
Fax: 262-723-6688
email: usasales@LinMot.com
Web: www.LinMot.com

Liability
NTI AG / LinMot (LinMot) is not responsible for any damages caused by improper use, application, or handling of LinMot manufactured or supplied materials and is not responsible for any consequential damages of any sort relating to the use of LinMot products.
LinMot's warranty is limited to repair or replacement as stated in our standard warranty policy as described in our "terms and conditions" previously supplied to the purchaser of our equipment (please request copy of same if not otherwise available). Product warranties are void if LinMot products are used with stators, sliders, or controllers not manufactured by LinMot unless such use was specifically approved by LinMot.

A copy of this notice must be attached to each motor and/or machine that the purchaser provides to others.

Specification of products are subject to change without notification

Edition: 2011
2012
2013
2014
2015